Celebrating Our 100th Issue

SPECIAL COLLECTOR'S EDITION

Woodsmith®

Vol. 17 / No. 100

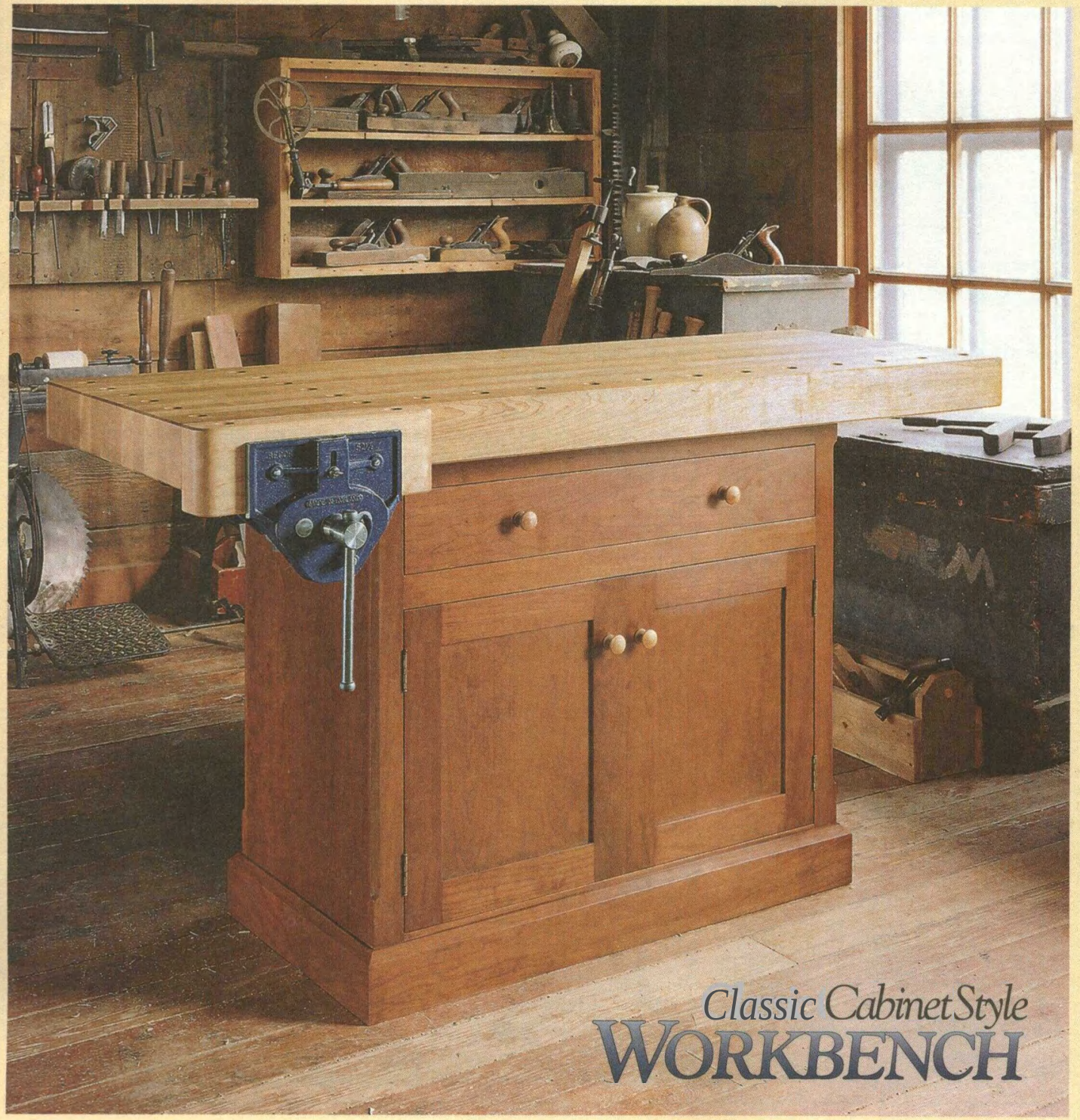

Classic Cabinet Style WORKBENCH

No. 100 August, 1995

Woodsmith®

Editor Donald B. Peschke
Executive Editor Douglas L. Hicks
Managing Editor Terry J. Strohman
Assistant Editors Jon Garbison, Mark A. Williams

Creative Director Ted Kralicek
Senior Illustrators David Kreyling, Cinda Shambaugh, Dirk Ver Steeg
Illustrator Erich Lage
Photographer Crayola England
Electronic Graphics Chris Glowacki
Design Director Ken Munkel
Senior Designer Kent Welsh
Shop Manager Steve Curtis
Shop Asst./Facilities Steve Johnson

CIRCULATION

Subscription Managers: Sandy Baum, Troy J. Dowell, Paige Rogers • *Assistant Subscription Managers;* Shane Francis, Julie Greenlee • *Newsstand Manager:* Kent A. Buckton

PUBLISHING SERVICES

Mgr: Gordon Gaippe • *Graph. Artist:* Cheryl L Cynor

CORPORATE SERVICES

Planning Director: Jon Macarthy • *Controller:* Robin Hutchinson • *Account.:* Laura Thomas • *Bookkeeping:* Holly Lucas • *Production Mgr.:* Carol Quijano • *Info. Sen. Mgr.:* Joyce Moore • *Elec. Pub. Coord.:* Douglas M. Lidster • *Network Adm.:* Nick Thielen • *Admin. Assistants:* Cheryl A. Scott, Julia Fish • *Receptionist:* Jeanne Johnson • *Build. Maint.:* Ken Griffith

WOODSMITH MAIL ORDER

Art Dir.: Cindy Jackson • *Catalog Prod. Mgr.:* Bob Baker • *Inv. Control/Prod. Mgr.:* Mark Mattiussi • *Proj. Supplies:* Linda Jones • *Tech. Supp:* Dave Stone • *System Operator:* Tammy Aldini

CUSTOMER SERVICE

Manager: Jennie Enos • *Team Leader:* Karla Cronin • *Customer Service Reps.:* Jennifer Murphy, Joy Krause, Sara Kono, Anna Cox, Lonnie Algreen, Adam Best, Kristi Andrews

SHIPPING DEPARTMENT

Supr: Nancy Johnson • *Fulfillment:* Gloria Sheehan, Chuck Carlson, Sylvia Carey, Larry Prine

WOODSMITH STORE

Manager: Dave Larson • *Assistant Manager:* Paul Schneider • *Sales Staff:* Wendell Stone, Pat Lowery • *Office Manager:* Vicki Edwards

Woodsmith® (ISSN 0164-4114) is published bimonthly (Feb., Apr., June, Aug., Oct., Dec.) by Woodsmith Corp., 2200 Grand, Des Moines, IA 50312.
Woodsmith® is a registered trademark of Woodsmith Corp. Copyright© 1995 Woodsmith Corporation. All rights reserved.
Subscriptions: Single copy: $3.95. One year subscription (6 issues), $19.95. Two years (12 issues), $35.95. (Canada/Foreign add $5 per year, U.S. funds.)
Second Class Postage Paid at Des Moines, IA and at additional offices.
Postmaster: Send change of address to *Woodsmith*, Box 10718, Des Moines, IA 50350.
Subscription Questions? Call 1-800-333-5078 8:00 am to 5:00 pm, Central Time, weekdays.
E-Mail: Prodigy: EDJE97A, CompuServe: 75330,2301, Internet 75330.2301@compuserve.com., America Online: Donpeschke.
Printed in U.S.A.

EDITOR'S COLUMN

Sawdust

It's still hard to believe that this is the 100th issue of *Woodsmith*. To me, it just doesn't seem that long ago that I was working on the first issue. I guess time does fly when you're having fun.

READERS' GALLERY. To help celebrate our 100th issue, I wanted to do something special. Something a little different.

So a couple issues back I asked readers to send in photographs of *Woodsmith* projects they had built. To say that I was pleased with the response would be an understatement. I can't remember the last time I had so much fun opening the mail.

Every day we received dozens of entries. (There's one day's worth shown at the bottom of this page.) And every day I was impressed by the quality and variety of the projects being built.

But best of all, it didn't seem to matter if a person had been a woodworker for 22 years (like Mary Ellen Hampton), or they were building their first woodworking project. All of them seemed to share a genuine love of woodworking. And that's something I'm proud to be part of.

All in all, we received hundreds of photographs. Many more than we could ever hope to put on two pages. So we picked photos that represented a wide variety of *Woodsmith* projects. Congratulations to those people whose projects appear on pages 16 and 17. And to everyone who submitted photos — thank you.

The Readers' Gallery isn't the only thing special about this issue. We've also included three special projects.

CLASSIC WORKBENCH. The last time we featured a traditional workbench was in *Woodsmith* issue No. 50. But this time, instead of a "European-style" bench with an open base, we took a different approach.

We designed a classic cabinet style workbench. (It reminds me of the kind of bench you might have seen in a turn-of-the-century woodworking shop.)

Besides offering plenty of storage for various tools and accessories, this bench also features a solid maple top. And an easy to install, bolt-on woodworking vise.

As I said before, this bench has an old fashioned feel to it. So we wanted to photograph it in an old fashioned setting (see the photos on the front and back covers). The trick was finding the right setting. But we found it right here in Des Moines: the woodshop at Living History Farms. (Living History Farms is an open air museum that tells the story of Midwestern agricultural and rural life.)

DOVETAIL CHEST. The other "old fashioned" project in this issue is the dovetail chest on page 18. It features traditional hand-cut joinery and a shellac finish.

THREE-BOARD SHELF. Also, check out the three-board shelf on page 28. It's a simple weekend project with a unique mounting system.

A LOOK INSIDE

Contents

FEATURES

Classic Workbench 6

Sturdy and solid — nothing on this workbench is fragile. Even the metal vise features heavy wooden jaws, so it has a wide clamping surface and holds a pair of bench dogs.

Laminated Top 14

There are two tricks to building a flat laminated bench top: laying out the boards properly and gluing them up. We've included some tips, techniques, and a simple jig for making this process as easy and accurate as possible.

Readers' Gallery 16

Many readers responded to our request for snapshots of the projects they've built from past issues. Here's your chance to see the work of some fellow woodworkers.

Dovetail Chest 18

This heirloom chest is just a box with a lid — and a sliding tray inside. It'll give you a chance to use some traditional woodworking techniques and an old-fashioned finish.

Hand-Cut Dovetails 24

If you've never cut dovetails by hand (or if you need a quick "refresher course"), here's our simple step-by-step method.

Three Board Shelf 28

Nothing fancy here, just three boards. But don't miss the unique hanging system. About all you need for this project is a board foot of lumber and an evening to build it.

DEPARTMENTS

Tips & Techniques 4

Shop Notes 30

Sources 31

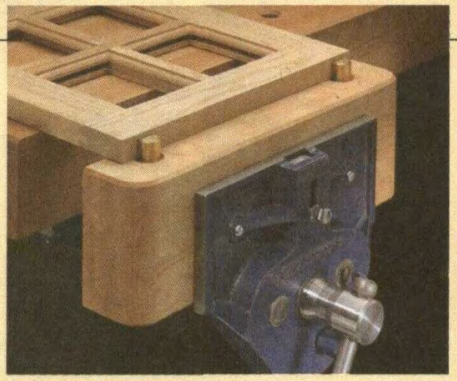

Classic Workbench *page 6*

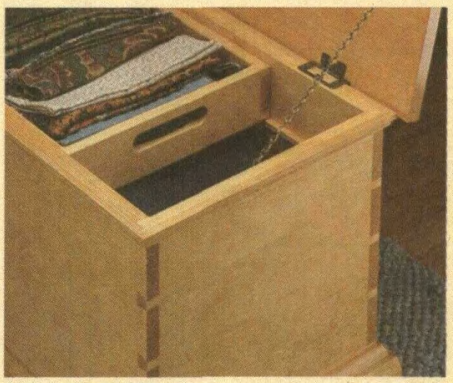

Dovetail Chest *page 18*

Hand-Cut Dovetails *page 24*

Three Board Shelf *page 28*

FROM FELLOW WOODWORKERS

Tips & Techniques

SANPER CONVERSION

• Sanding in tight places is about as much fun as doing taxes. You could buy an expensive detail sander (the kind with a triangle-shaped head), but instead I converted my finishing sander into one.

It's easy to do. Just change bases. Simply remove the screws and take off the old pad. Then use it as a template to mark the mounting holes for a new base. But here's the best part. You can make a new base fit any shape you want.

This new base can be made from almost any thin material. But I like ¼"-thick Masonite. The self-adhesive sandpaper I use seems to stick better.

Jace Laakso
Missoula, Montana

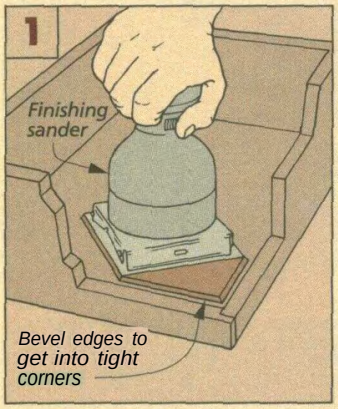

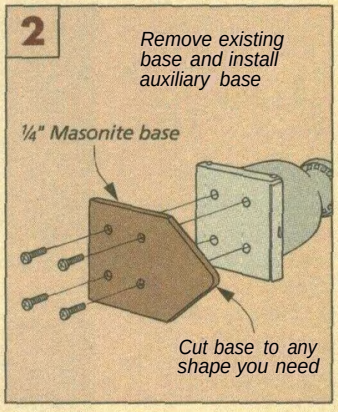

45° CORNER CLAMP

• I was recently working on a display cabinet with a glass front built at a 45° angle (like a bay window). The problem was trying to clamp and glue the front frame pieces together. That's because the frame pieces were ripped at 22½° (half of 45°).

My solution was a two-piece clamping jig. There's a base piece with an opening cut in it to match the angle of the miter, see drawing below. It cradles the workpiece and keeps it from moving. A clamping block on top pushes the workpiece down against the angled base. That way when the clamp is tightened the mitered pieces are squeezed tight together.

Orville Heitkamp
Belle Plaine, Minnesota

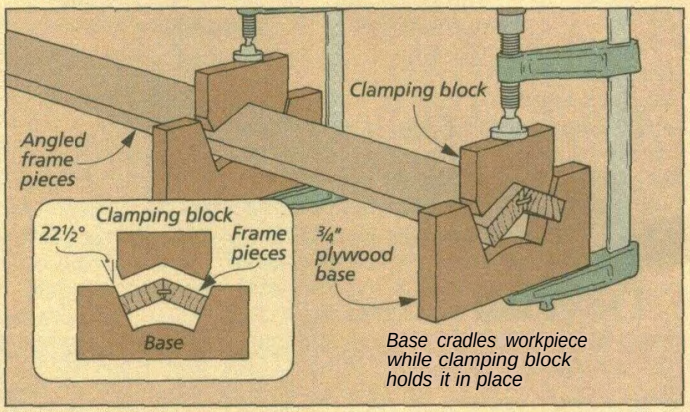

ROUTER FENCE INSERTS

• I need a large opening (for clearance) in my router table fence when using large bits. But a large opening isn't safe when routing small pieces — they can wedge between the bit and fence causing kickback.

To solve this problem, I added a replaceable insert to my fence. It fills in the space around the bit so small pieces won't get caught in the opening.

To make an insert for your fence, simply rout a shallow mortise (like the mortise for a hinge) around the opening, see Fig. 1. It's cut a little larger than needed for the woodscrews that hold it in place. And just deep enough to equal the thickness of the insert. (I used a ⅛"-thick piece of Masonite.)

I make an insert for each bit. For a straight bit, simply raise it in the router table and cut out the insert, see Fig. 2.

But for profile bits, the bearing gets in the way. So first cut a clearance slot in the insert, and then cut the profile, see Fig. 3.

Mark Muncie
Indianapolis, Indiana

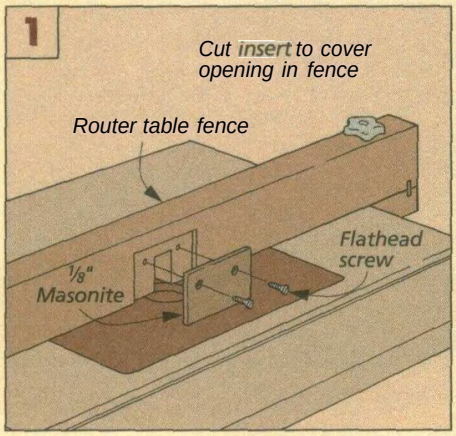

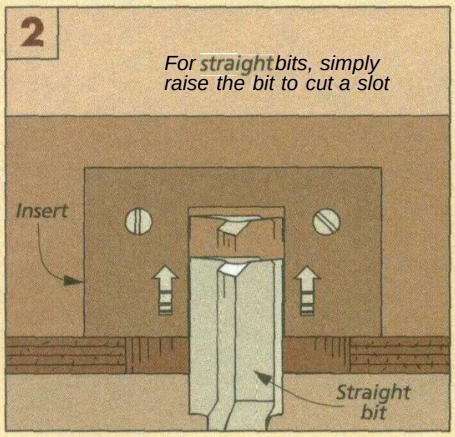

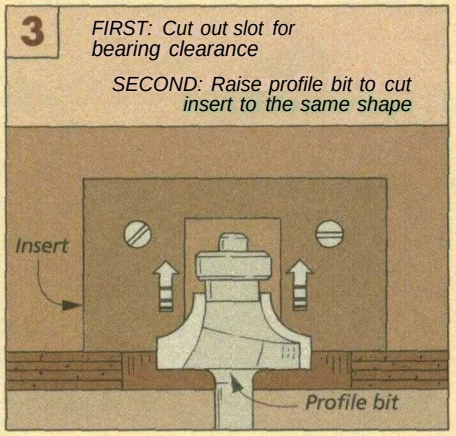

BAND CLAMP BLOCKS

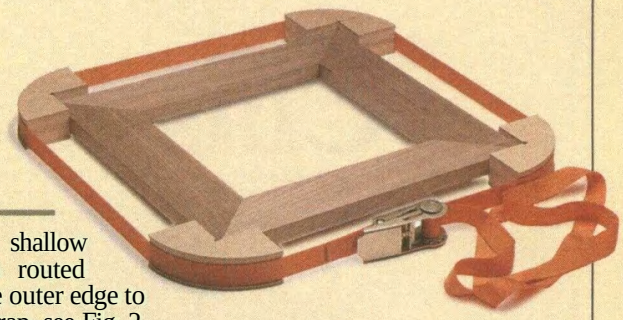

• I like to use a band clamp and corner blocks to glue-up mitered pieces. But on many blocks, the strap "hangs-up" on a sharp outside corner. So I made a set of corner blocks with a rounded outside edge.

You cut all four blocks from a 1½"-thick blank, see Fig. 1. But it's easier to do most of your work on the blocks while they're still part of the blank.

First, lay out all of your cuts. Then make a partial saw cut on all four sides to define the block size, see Fig. 1. The diameter can be cut next on the band saw and sanded smooth. Then drill a ¼" dia. clearance hole in each of the blocks.

Next, a shallow groove is routed around the outer edge to hold the strap, see Fig. 2. A tall fence supports the workpiece when rolling it past the bit. And a Masonite base covers the hole in the tabletop so the workpiece won't drop into it.

Now cut the blank into four blocks. To do that, first band saw the pieces apart, see Fig. 3. Then use the table saw to cut the inside corners exactly 90°.

Mark Routzahn
Tiffin, Ohio

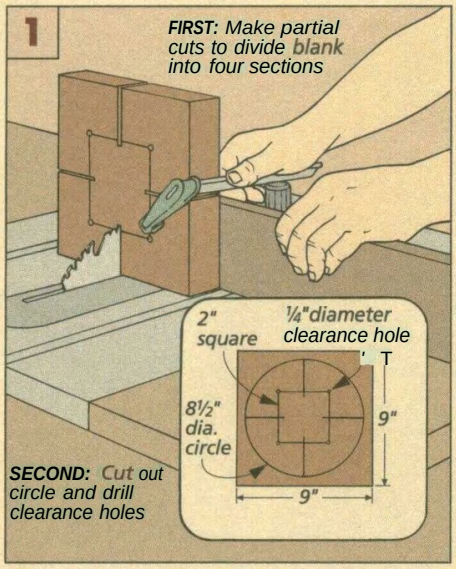

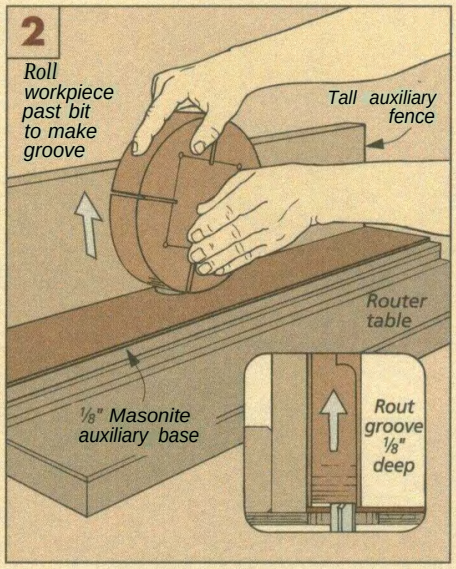

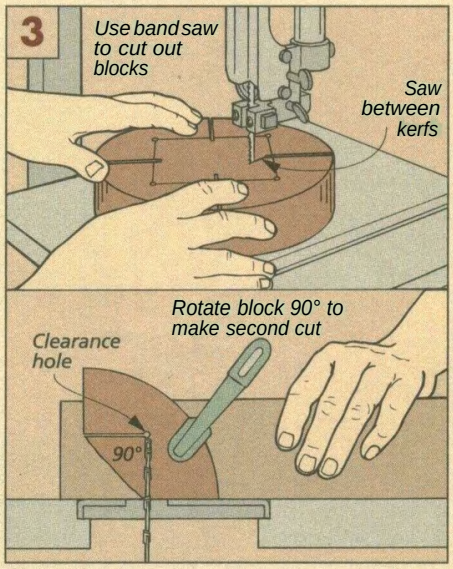

QUICK TIP

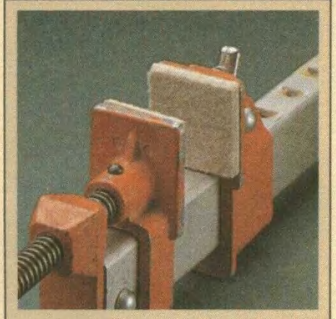

• Clamp pads can prevent a lot of dents. But instead of buying them, I make my own.

These pads are cut from sheets of heavy duty felt available at most hardware stores. Self-adhesive backing holds them on the clamp jaws.

Ed Flietner
Phillips, Wisconsin

SILL COCK KNOBS

• A quick replacement for large plastic knobs, like you'd find on a router table, is a carriage bolt and a sill cock handle (the metal handle from a water spigot), see Fig. 1. Both are available at local hardware stores.

Simply insert a Vi" carriage bolt in the handle and add a nut and washer, see Fig. 2. The square shank on the bolt, fits the opening in the handle perfectly.

Gary Adler
Gassville, Arkansas

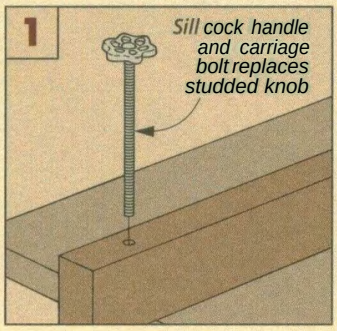

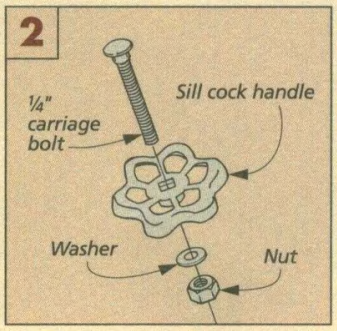

SUBMIT YOUR TIPS

If you would like to share an *original* shop-tested tip, send it to *Woodsmith*, Tips and Techniques, 2200 Grand Avenue, Des Moines, Iowa 50312. Or if it's easier for you, FAX it to us at: 515–282–6741.

E-Mail: 75330,2301@compuserve.com.

If we publish it, we will send you $30 to $150, depending on the published length. Include a brief explanation and sketch (or photo). And don't worry, we'll rewrite the tip and redraw the art if necessary. Also, *please* include a daytime phone number.

Classic Workbench

The base of this workbench does more than support the top. The trays and drawer store a shop's worth of tools — within easy reach.

Most shops can always use more storage space. So why not build a workbench where the base not only supports the top but also provides space inside for your hand and power tools? That's the idea behind this workbench.

And to make it easy to use this storage space, a drawer and two trays ride on full-extension slides to keep your tools accessible.

Then there's the top. This laminated, hard maple top adds considerable weight to a storage cabinet already filled with tools. When you combine the two, you end up with a "rock-solid" workbench capable of handling most any project.

To hold these projects on the bench, there's a metal woodworking vise attached to one corner with a thick, maple "block covering the front jaw. A pair of dog holes in the block line up with the holes in the bench top so bench dogs can be used to hold big projects. And the vise is easy to install. Just four lag screws hold it in place.

Construction Details

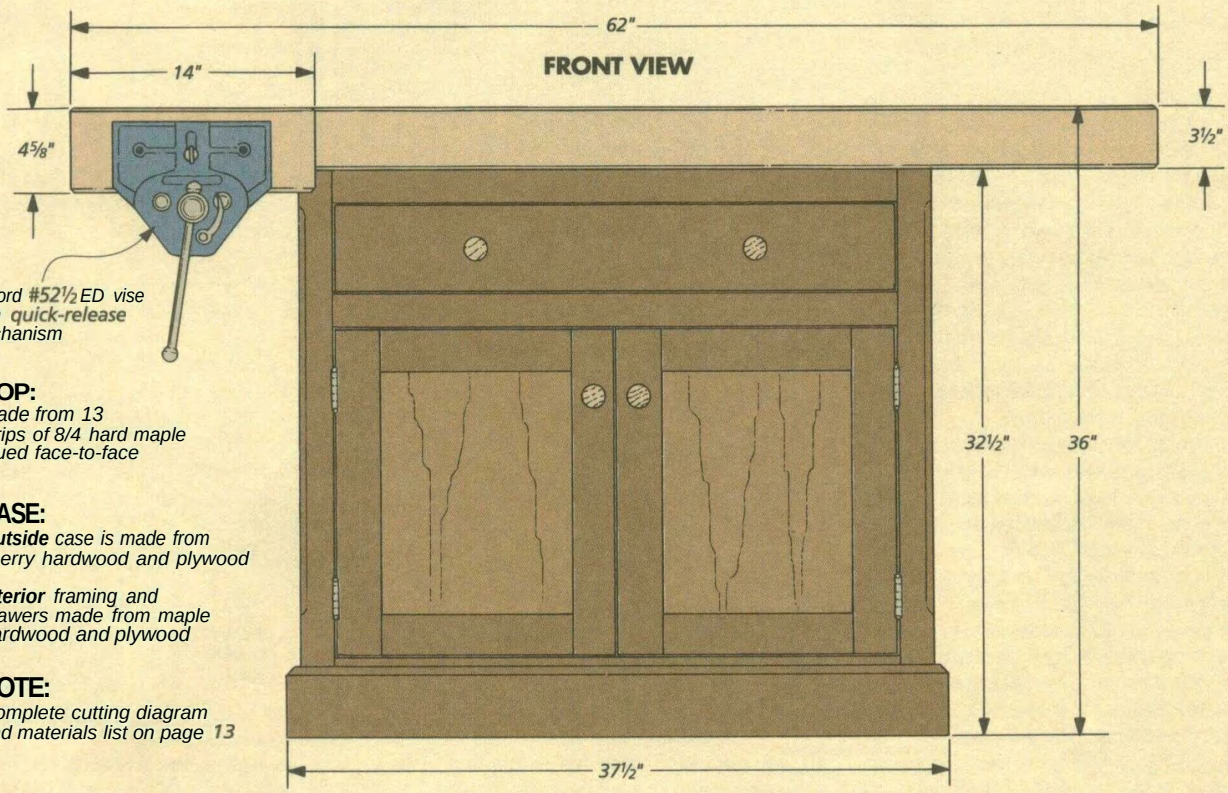

TOP:
Made from 13 strips of 8/4 hard maple glued face-to-face

BASE:
***Outside** case is made from cherry hardwood and plywood*

***Interior** framing and drawers made from maple hardwood and plywood*

NOTE:
Complete cutting diagram and materials list on page 13

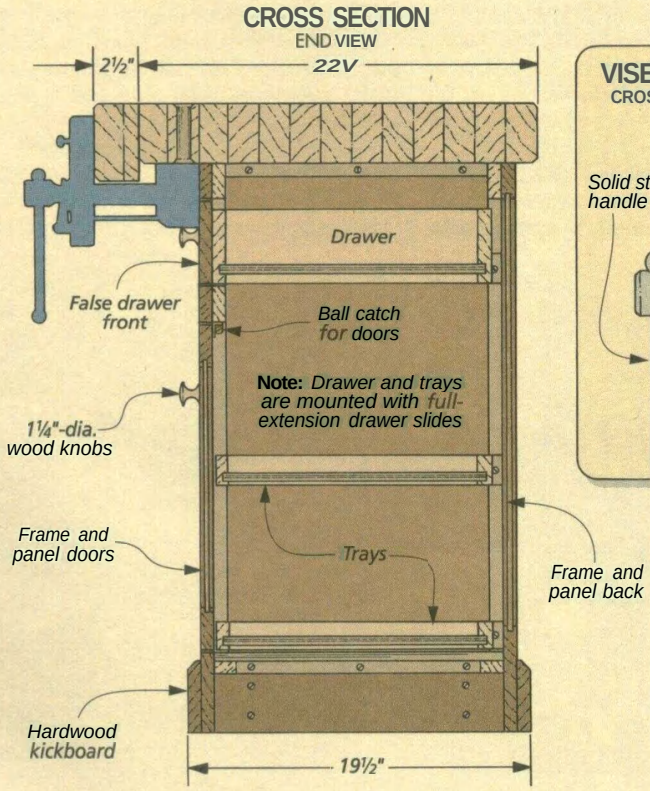

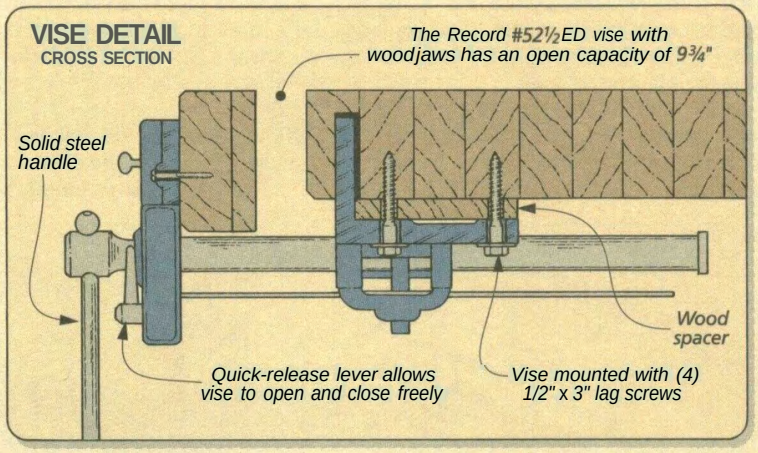

HARDWARI LIST

- (1) Record #52½ ED Vise
- (2) #14 x 2" Rh Woodscrews
- (4) ½" x 3" Lag Screws
- (4) ½" Washers
- (4) 1¼"-dia. Wood Knobs
- (2 pr.) 2" x 1⅜" Ball-tipped Hinges
- (2) Ball Catches
- (8) #4 x ½" Fh Woodscrews
- (4) ¼" x 3" Lag Screws
- (4) ¼" Washers
- (20) #8 x 1¾" Fh Woodscrews
- (36) #8 x 1¼" Fh Woodscrews
- (16) #8 x 1" Fh Woodscrews
- (3 pr.) 16" Full-Extension Drawer Slides

CASE

The cabinet for this workbench is a large wooden case that's built like a fine piece of furniture. The case consists of two frames (front and rear) held together by a pair of plywood sides.

REAR FRAME. I decided to start with the rear frame. It consists of a pair of ¾"-thick stiles and rails that surround a couple ¼"-thick plywood panels and a center divider, see exploded view at right. Since the **stiles (A)** are identical, I cut both to size first.

But before setting them aside, it's a good time to cut a couple of grooves. The first (centered on the edge) holds the plywood panels and the stub tenons cut on the ends of the rails, see detail 'a.' The second groove (cut on the inside face) holds a ⅜" tongue cut on the case sides.

Once the grooves are complete, the **upper rail (B)** and **lower rail (C)**, can be cut next. Both these rails are the same length and have ⅜" stub tenons cut on the ends and a groove cut in one edge. The only difference is their widths. The upper rail is 2" wide, while the lower rail is 6⅞".

I dry assembled the stiles and rails next so I could check how well the stub tenons fit into the grooves. It also gave me a chance to measure the opening for a center divider and two plywood panels.

At first I thought about using a single piece of plywood to fill the opening. But to make the cabinet stronger, I added a **center divider (D).** This is just a 3"-wide piece of stock with stub tenons on the ends and grooves on both edges, see detail 'b.' It fits between the upper and lower rails and divides the opening in half.

To determine the size of the plywood **back panels (E),** measure between the frame pieces and center divider and add for the grooves. Then cut the panels for a tight fit, see exploded view. Now glue and clamp the panels and frame pieces together.

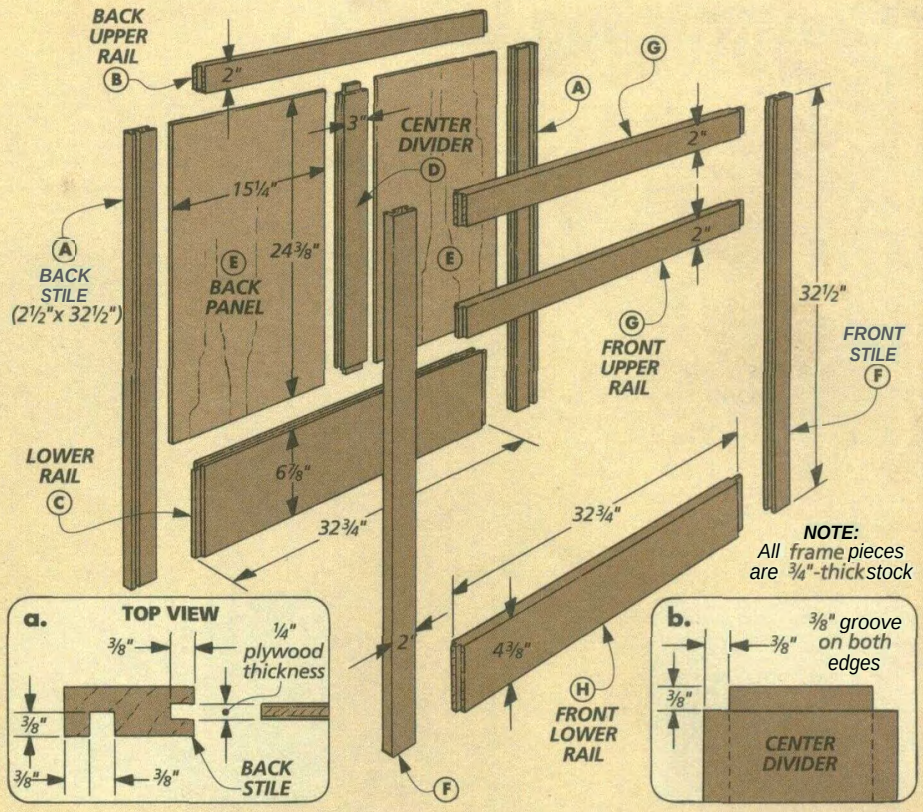

FRONT FRAME. Like the back frame, the front frame is also built with stiles and rails. But here you won't need the plywood panels. Instead, the frame pieces create openings for a drawer and two doors.

Once again, there's a pair of identical **stiles (F)** with grooves on one edge and on the inside face, see drawing above. But instead of two rails, the front frame has three.

There's a pair of identical **upper rails (G)** cut to the same size (2" x 323/4") with stub tenons on the ends. They frame the drawer opening. There's also a **lower rail (H)** cut to the same length, only it's wider (4⅜"). Since you aren't installing plywood panels, you don't need to cut grooves on any of the rail edges. Just glue and clamp the front frame together, see Fig. 1.

But the grooves in the stiles between the rails need to be filled. So I added small filler **strips (I),** see **Fig. 1.**

With the front and back frames complete,

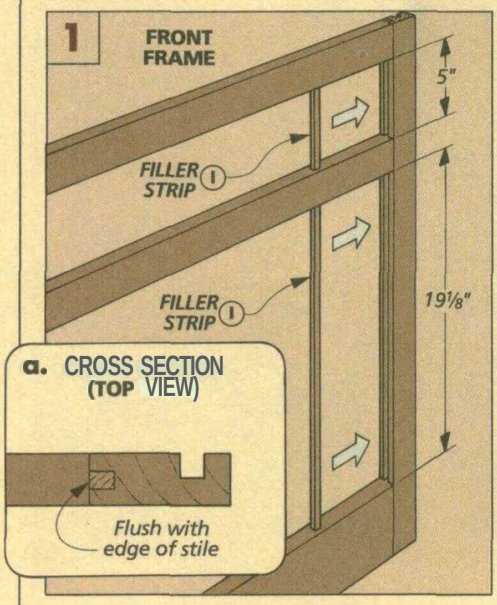

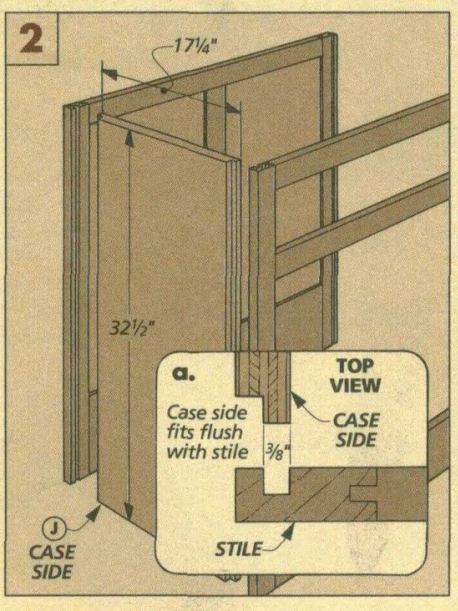

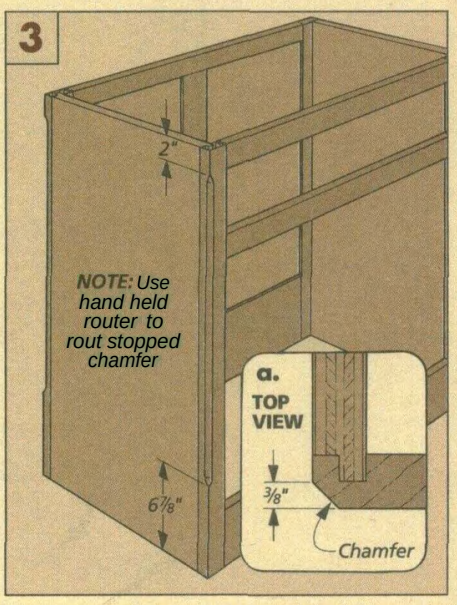

a pair of case **sides (J)** are cut next, see Fig. 2. These are just ¾"-thick pieces of plywood with ⅜" rabbets cut on both edges. Each rabbet forms a tongue that fits into the grooves already cut in the stiles, see Fig. 2a.

Then assemble the sides and frames and glue and clamp the case together. After tightening your clamps, check that the case remains square.

CHAMFER STILES. With the case assembled, I routed a decorative stopped chamfer on all four corners, see Fig. 3. (It works best to rout this chamfer in several passes.)

CLEATS. Next, I turned my attention to the inside of the case, starting at the bottom and working my way up.

First, I cut a pair of **front/back cleats (K)** and a pair **of side cleats (L)** to fit inside the case, see Fig. 4. These cleats are positioned so the case bottom (added next) will fit flush with the top edge of the bottom rail on the front frame, see Fig. 4a.

BOTTOM. After the cleats are installed, the **case bottom (M)** can be cut to size, see Fig. 4. This piece of ½"-thick plywood rests on the cleats and helps strengthen the cabinet when it's glued and screwed in place.

STIFFENERS. On most projects, I'd be finished with the cabinet once the bottom was installed. But not here. Instead, to make the case stronger, I added frame stiffeners. These ¾"-thick pieces of maple cover the joint lines on the frames. It's an easy way to strengthen the stub tenon joints.

I started by cutting three **horizontal stiffeners (N)** to fit inside the case, see Fig. 5. Two fit behind the top rails on the front frame, while the third is glued to the top rail of the back frame, see Fig. 5a.

Next, I added vertical stiffeners. First, the **vertical stiffeners (O)** are glued and screwed to the back two corners of the case between the horizontal stiffener and case bottom, see Figs. 6 and 6a. The other **vertical stiffeners (P)** and **(Q)** fit along the sides of the drawer and door openings and are glued and clamped to the front frame.

MOUNTING CLEATS. Now to hold the top in place later, I added a pair of **mounting cleats (R).** These are just ¾"-thick pieces of stock glued and screwed flush with the top of the case sides, see Figs. 6 and 6b.

KICKBOARD. To complete the case, all that's left is to install a kickboard.

First, I cut the stock to finished width (4") with a ½" chamfer routed along the top edge. Then the **front/back kickboards (S) and side kickboards (T)** are mitered to fit around the base and are glued and screwed in place, see Figs. 7 and 7a.

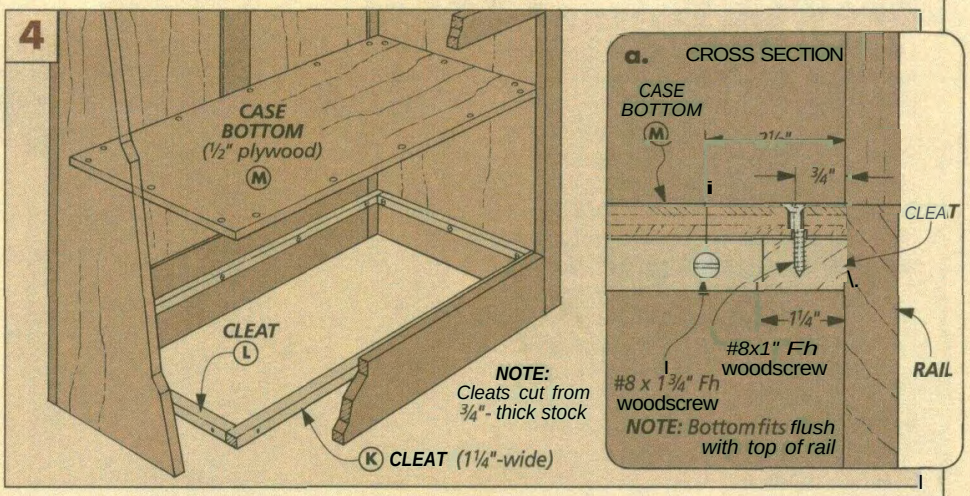

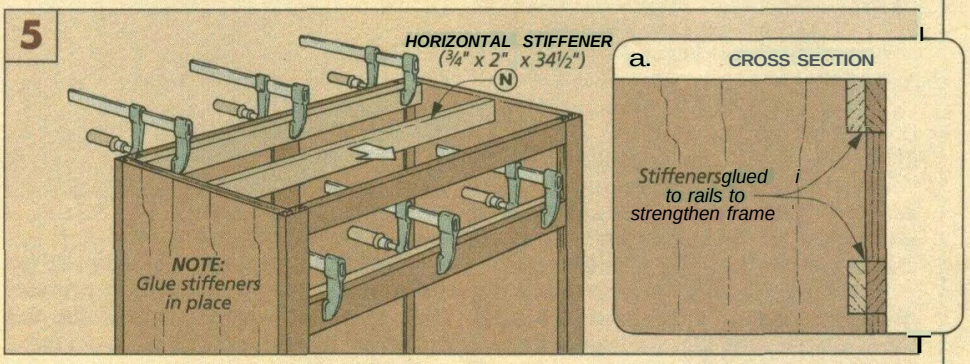

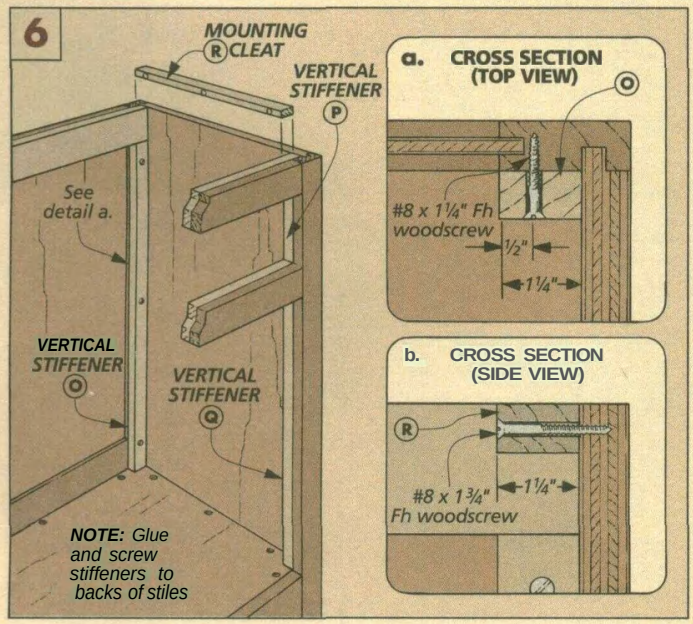

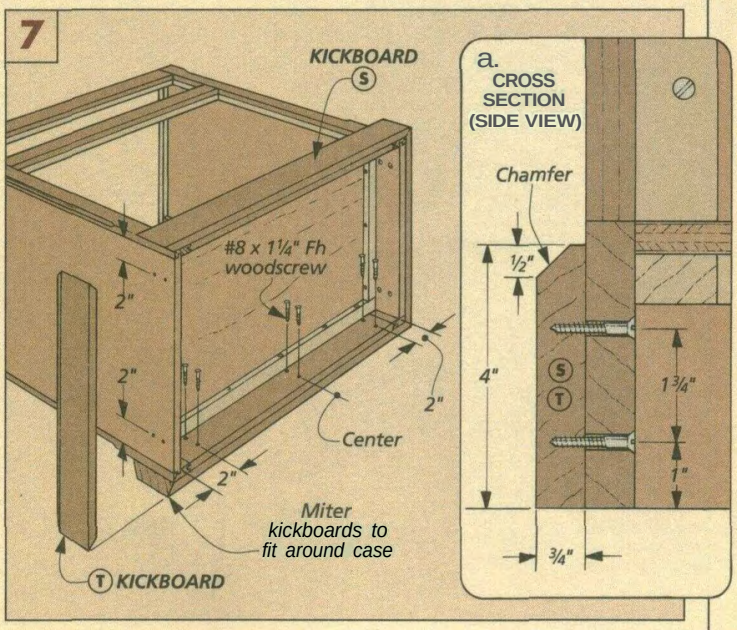

DRAWER, TRAYS, & DOORS

Once the outside of the case was finished, I turned my attention to the inside to add a pair of trays and a drawer.

CLEATS. I planned on using full-extension slides for the drawer and trays. But the slides couldn't be screwed to the case sides because the frame stiffeners got in the way. So I added slide cleats (U) to provide a mounting surface for the slides, see Fig. 8.

These cleats are ¾"-thick pieces of stock screwed to the frame stiffeners. They don't extend all the way to the front of the case, otherwise the doors and drawer wouldn't close all the way, see Fig. 8a. To get the needed clearance, I installed the cleats 1/16" back from the inside face of the front frame.

TRAYS. With the cleats installed in the case, I began work on the trays. I decided to use pull-out trays because it makes it a lot easier to get at your tools — especially the ones at the back.

To determine the size of the front/back tray pieces, first measure the opening between the cleats (mine was 30½"). Then subtract 1" for the thickness of two slides and ½" for the lap joints at the corners. Finding the size of the tray sides is easier. It matches the length of your slides (16").

I used these measurements to cut the tray front/back (V) and sides (W) to finished size, see Fig. 9. (My tray was 16" x 29½".) Next, I cut a ¾"-wide rabbet at both ends of the sides for lap joints to join the tray pieces together, see Fig. 9a. Then a groove can be routed on the inside face of all the tray pieces to hold a ½"-thick piece of plywood for a bottom, see Fig. 9b.

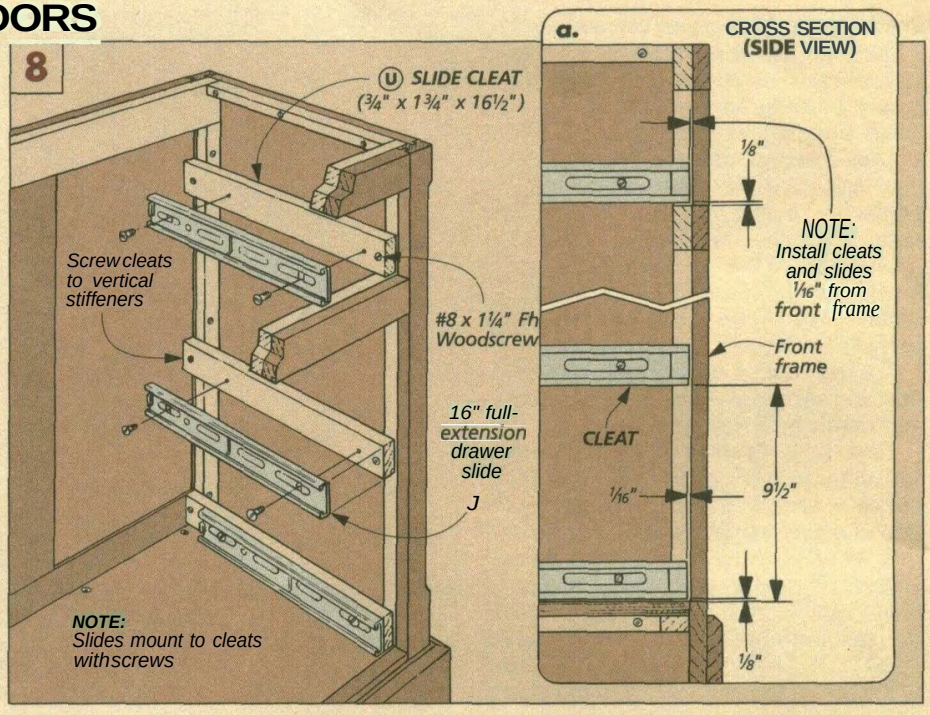

Making the tray bottom (X) from ½" plywood keeps it from sagging when loaded with tools. It should fit snug in the tray pieces before you glue the tray together.

DRAWER. With the trays complete, the drawer is built next. What's different is how the drawer is held together. It has hand-cut dovetails for strength and durability.

Here again, you want to measure the opening before making any cuts. Then cut the drawer front/back (Y) and sides (Z) to finished size and lay out and cut the dovetails, see Figs. 10 and 10a. For more on cutting dovetails, refer to page 24.

Now rout a groove to accept a drawer bottom, see Fig. 10b. Once again, I used ½"-thick plywood for added strength. Then cut the bottom (AA) to fit tight and glue and clamp the drawer together.

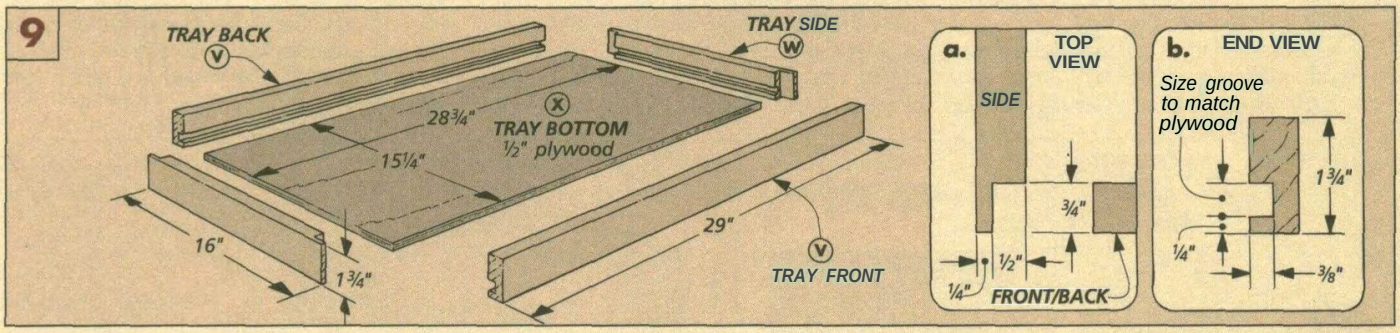

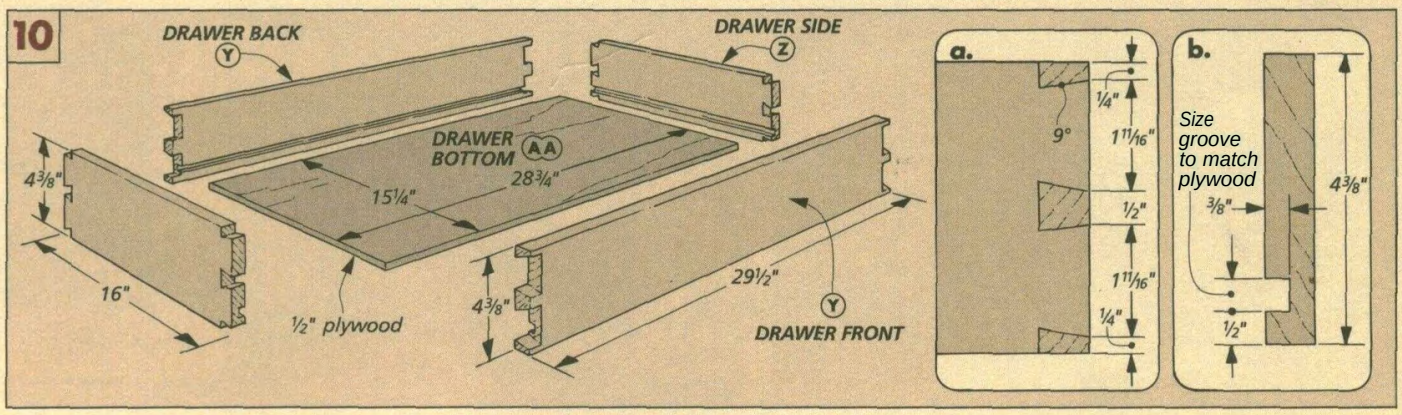

You'll probably notice the groove cut for the drawer bottom is still visible on the drawer front. But don't worry about it. It'll be hidden by a false front added later.

SLIDE INSTALLATION. After the drawer and trays are complete, the next step is to install the full-extension drawer slides. I used a pair of 16" slides for the drawer and each tray. (To find sources for the hardware you need to build this bench, see page 31.)

Basically, installing the slides is a two-step process. First, one half of the slide is screwed to the slide cleat in the case, see Fig. 8. Then the other half is mounted to the drawer or tray, see Figs. 11 and 11a.

FALSE **FRONT.** With the drawer installed in the case, a **false front (BB)** is added next. This is just a ¾"-thick piece of stock that fits in the case with a 1/16" clearance all around, see Fig. 12.

Before screwing the false front to the drawer, I drilled a pair of ½"-dia. holes for some wood knobs. Then install the false front, keeping the needed clearance around the drawer and glue the knobs in the holes.

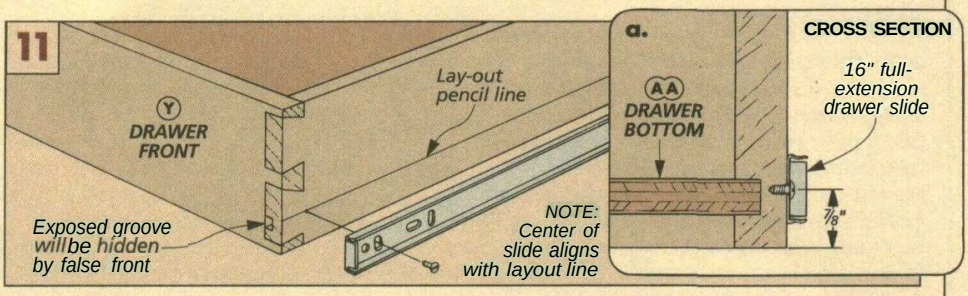

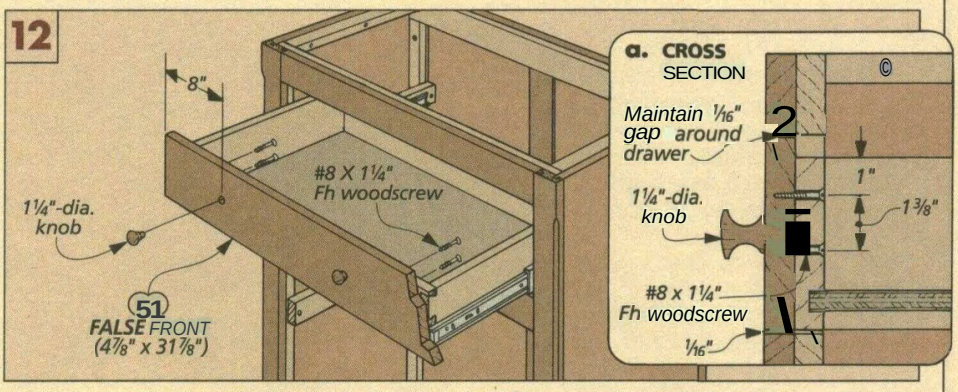

DOORS

The last thing to add to the cabinet is a set of doors. The unique thing about these doors is they're cut to fit tight first — then trimmed for clearance later.

The goal here is to have a 1/16" clearance on the top, bottom, and along the sides of the doors, see Fig. 14. You also need the same clearance (1/16") between the doors in the middle. So I measured the opening in the frame first (19⅛" x 32") and then cut the **stiles** (CC) and **rails** (DD) for a tight fit, see Fig. 13. But remember to allow for the tenons when cutting the rails to length.

Note: Later, after the doors are assembled you can trim them for the 1/16" clearance.

Next, a groove is routed in all the frame pieces to match the thickness of the center panel, see Fig. 13a. And to hold the frame together, tenons are cut on the ends of the rails to fit snug in the grooves, see Fig. 13b. Then a **door panel (EE)** is cut to fit in each frame before gluing the door together.

Now a pair of hinges can be installed on each door by mortising them into the front frame and door stiles, see Figs. 13 and 14. Here, I used a couple pennies for spacers to hold the door in position while installing the hinges, see Figs. 14a and 14b.

Finally, to complete the doors, a pair of knobs is attached to the door stiles. And a pair of ball catches is installed in the cabinet to hold the doors closed.

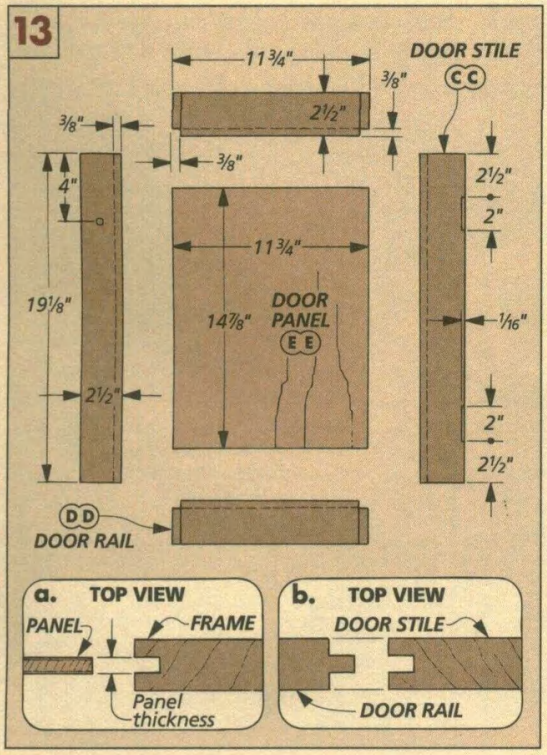

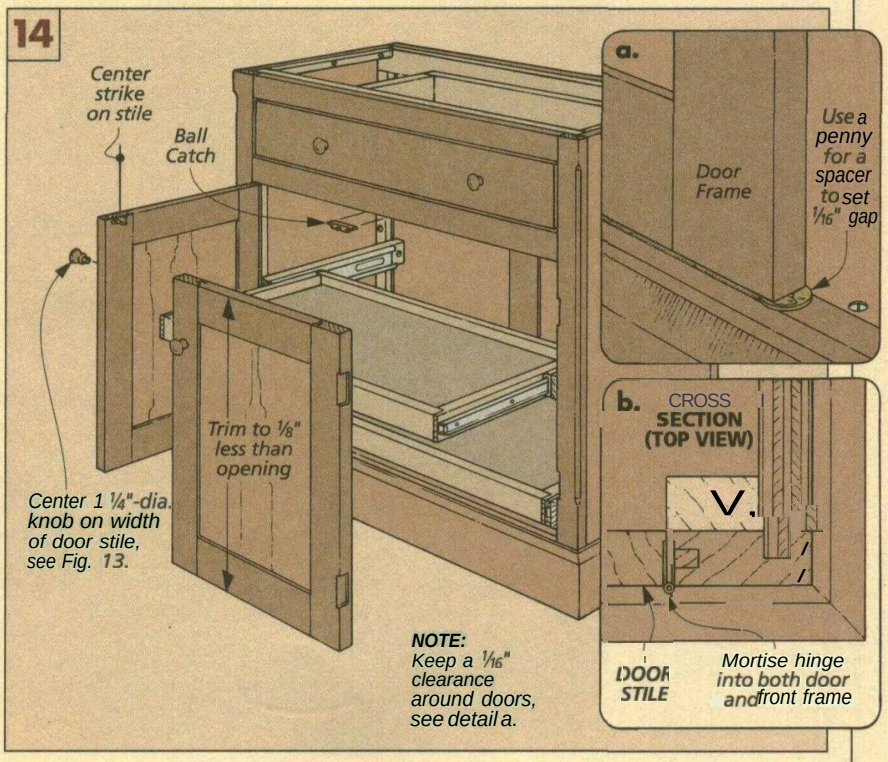

BENCH TOP

After the cabinet is complete, I worked on the bench top next. Note: For more on building laminated tops, refer to page 14.

STRIPS. This laminated top consists of 13 **bench top strips (FF).** These strips are 1¾"-thick pieces of stock cut to a finished length of 62" and a rough width of 3⁹⁄₁₆". Later, the top is sanded to its final thickness (3½"), see exploded view at right.

ALIGNMENT HOLES. To keep all the strips aligned when gluing them together, I drilled holes for short lengths of ½"-dia. dowels, see detail 'a.' But remember, the two outside strips (1 and 13) only have holes on one face.

DOG HOLES. YOU could glue the bench top strips together now. But I didn't want to wrestle with a heavy top. And there are still a few things left to do.

First, a series of ¾"-dia. dog holes are drilled in the top for bench dogs, see detail 'b.' Refer to page 31 for sources of bench dogs. Then rout a ⅛" chamfer around each hole to soften the sharp edges.

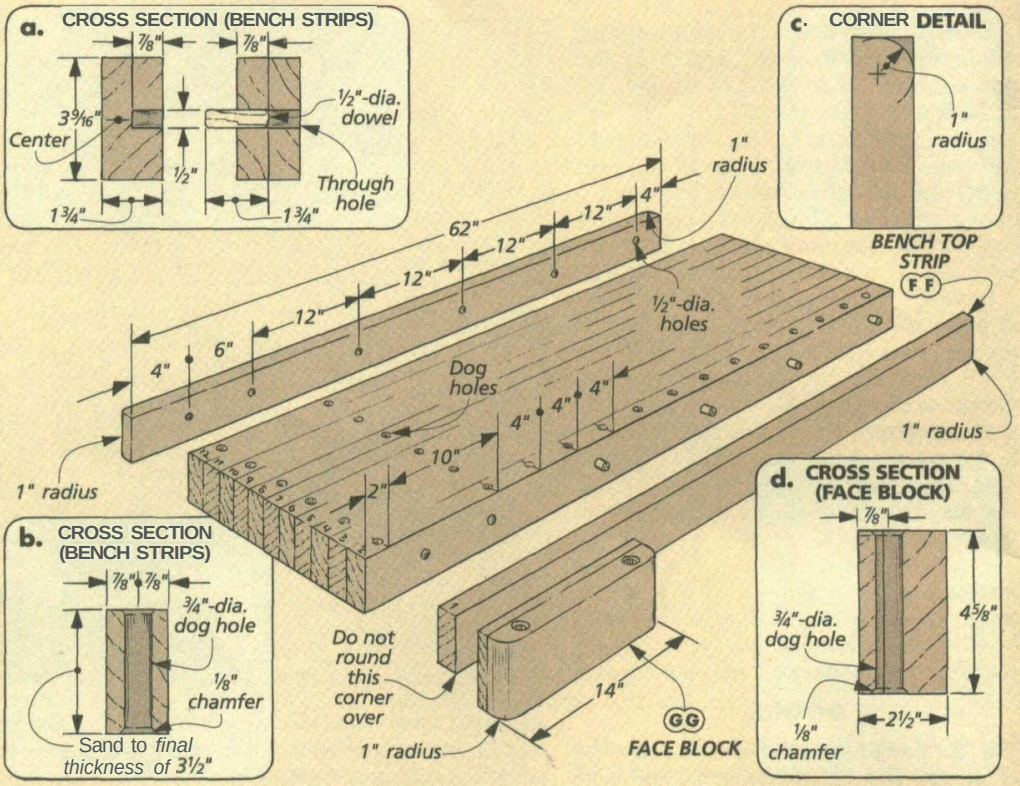

ROUNDOVER. Next, the corners on the two outside strips are rounded over, see detail 'c.' Note: But don't round the corner at the end where the vise will be mounted.

NOTCH. There's one more thing to do before gluing the top together. And that's to rout a pocket in the front strip for mounting a metal vise. The back jaw of the vise slips into this pocket. This way, the metal jaw is covered by the front strip, and you have a long, smooth surface to clamp against, see Figs. 15 and 18.

GLUE-UP. With the pocket routed, the bench top strips can be glued together, see Fig. 16. Later, I used a belt sander to sand the top and bottom faces smooth.

BENCH TOP INSTALLATION. Once the top is sanded, it can be attached to the cabinet. But first I routed an ⅛" chamfer around the bottom edge, see Fig. 17. Then position the top so it's centered side to side with a 1¼" overhang on the back, see Fig. 17a. Now drill shank holes through the cleats in the cabinet and use 3" lag screws with washers to hold the bench top in place.

VISE

With the top secured to the cabinet, the vise can be installed next. I used a Record vise,

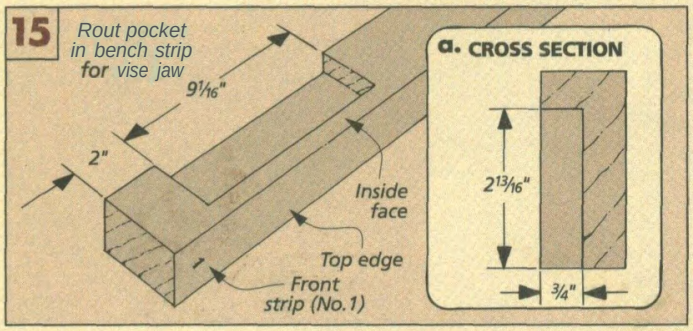

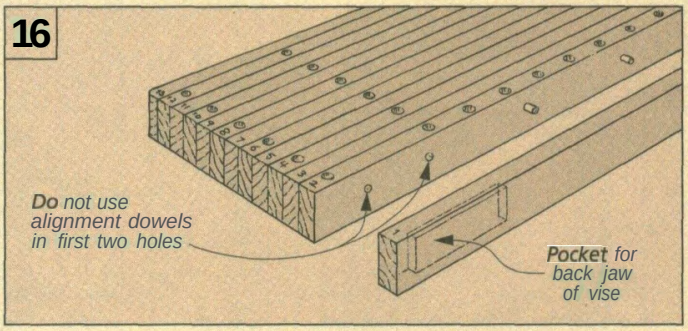

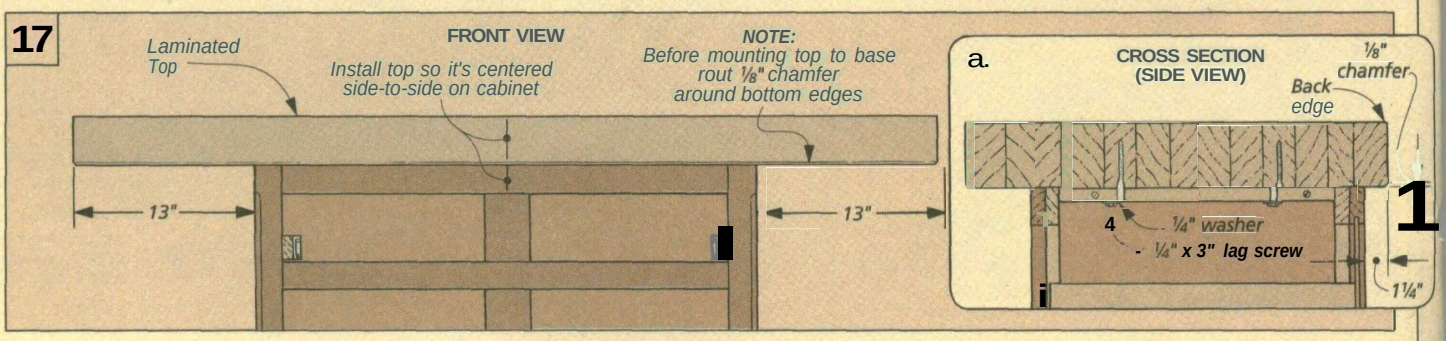

Laminated Top

Building a laminated top may seem a little intimidating at first. You have a lot of boards to cut and fit together. But you don't have to be a magician to get a **solid,** tight-fitting top if you know a few tricks. It only takes two steps: laying out the boards so they're compatible with each other and gluing them together to avoid any gaps.

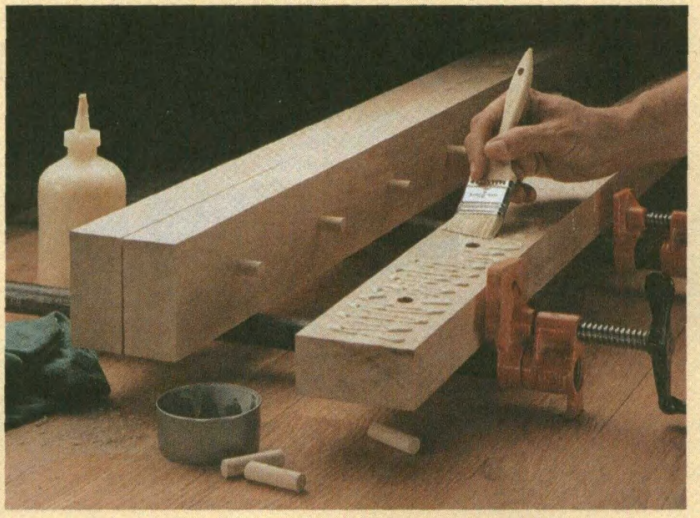

LAYOUT

Like drawing and discarding playing cards to get a better hand, the boards in a laminated top need to be sorted for the best fit and appearance. This means checking each piece for crook and bow but also arranging the workpieces so the top looks its best.

CROOK. The maple boards I used all had a little crook and bow. But when trying to assemble a laminated top, the crook of a board can cause you more trouble than its bow. So I checked for crook first.

Crook is **warpage** across the width of a board running from **end-to-end,** see Fig. 1 and the **Shop** Tip below. It can be **difficult** to "pull" a crooked board straight. So do you discard all the boards with crook? Well, if there's more than ⅛" of crook, I'll cut it into shorter pieces for another project.

Boards with less than ⅛" of crook can be used — if they've been sorted first. I arrange them so the crooks oppose each other, see Fig. 1. This way when the pieces are forced flat, the crook is canceled. To keep track of the direction, I'll mark an arrow on the board pointing to the crook.

BOW. When **you've** identified the **crook,** you can sort the boards to minimize bow. Bow is warpage along the edge from **end-to-end,** see Fig. 2. Unlike crooked boards, you can usually pull a bowed board straight. That's because you're straightening the board across its thickness (not across the **width**).

Here again, arrange your boards so the "bows" oppose each other. I'll put my **straightest** boards on the **outside** to help pull the rest of the bowed pieces straight. Note: While rearranging the boards for bow, remember to keep the crooks opposed.

APPEARANCE. **With** the pieces sorted for crook and bow, you still need to consider how the boards will look when glued together. Small blemishes will be sanded out when the top is leveled. But for larger **defects** you should shuffle the boards again.

LABEL PIECES. **Once you have the** boards arranged for crook, bow, and appearance,

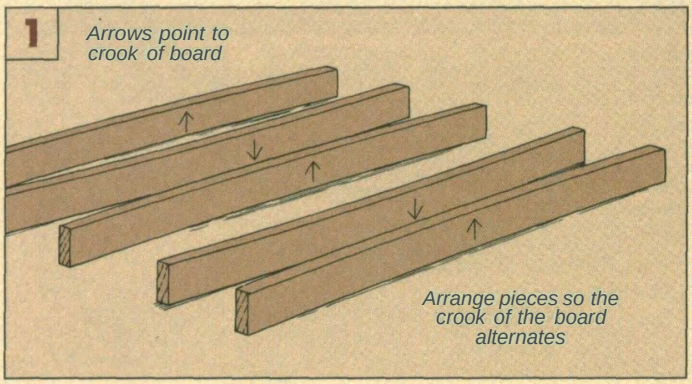

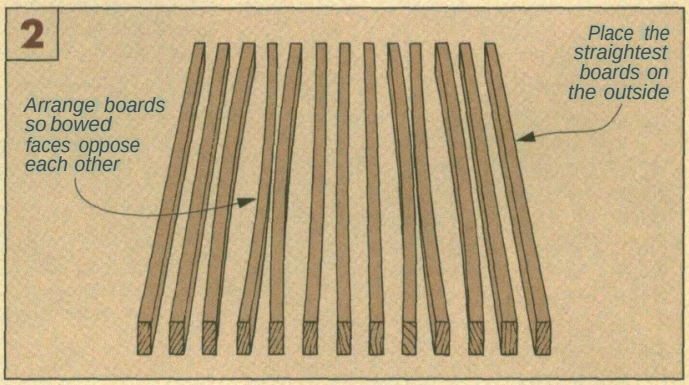

SHOP TIP

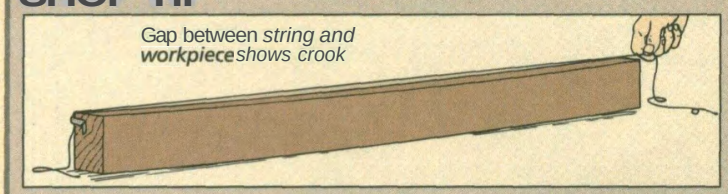

How much crook is there? *It's not always easy to tell. A simple way to measure crook is to use a string and some tape. Just stretch the string from end-to-end and tape it in place. Then at the center measure the gap between the string and the board.*

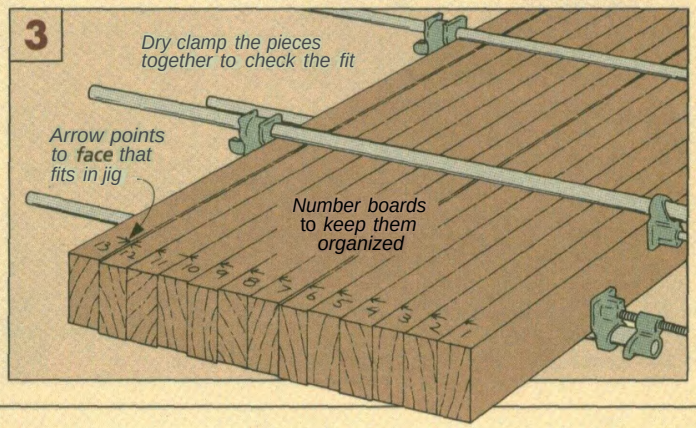

dry clamp them together, see Fig. 3. Then number the pieces along one end. After all the work of sorting, you want to make sure you can get them back together correctly.

Besides numbering the boards, I'll also mark an arrow next to the number. This arrow is used with an alignment jig for drilling guide holes. The arrow points to the face that fits in the jig. Note: The arrow on the last board (No. 13) points to the opposite face than the others. That's because the holes in this piece must be drilled from the opposite side.

GLUE-UP

It can be a challenge keeping your boards aligned during glue-up. Splines or biscuits can help. But I prefer short pieces of dowel. Not only do they keep the top flat, but they also keep the ends aligned.

DRILLING JIG. To drill the dowel holes, I made a simple jig. It fits over the workpiece so I could drill accurate "starter holes" with a hand drill. Then I moved the workpiece to the drill press and made these holes larger to hold the dowels. Drilling starter holes first ensures the dowel holes in each workpiece will be aligned. Plus, the starter holes help guide the larger drill bit.

The jig consists of three pieces: a guide block with 1/16"-dia. guide holes, a top cap, and end cap, see Fig. 4.

USING THE JIG. To use this jig, it needs to be clamped to your workpiece. To do this, position the jig against the face indicated by the arrow, keeping the numbered end tight against the end cap. Now clamp the top cap first. This forces the jig to follow any crook in the board. Then clamp the jig to the face.

Next, drill guide holes in each piece, see Fig. 5a. Note: The jig fits on the same side of all the pieces except the last one (No. 13).

DOWEL HOLES. With the guide holes drilled, the dowel holes are drilled next. I used a 1/2"-dia. brad point bit in the drill press, see Figs. 6 and 6a. Just make sure the dowels you plan on using fit snug. Note: The dowel holes in the first and last boards (1 and 13) don't go all the way through.

GLUE-UP. Gluing-up a laminated top isn't complicated. It just takes a lot of glue and a little muscle. A trick I'll use is to glue up the top in sections instead of trying to do the whole thing at once, see Fig. 7.

The goal is to join two halves. To do that, I'll glue together smaller segments (the 3 or 4 outside boards) first. Since these are my straightest boards (they were sorted that way), they form a straight base to build on. Then put a liberal amount of glue on one face of each board, insert the dowels, and clamp the sections together.

With the first sections dry, add more boards to both sections until you have two halves. Finally, glue these two halves together to complete the top, see Fig. 8. ❑

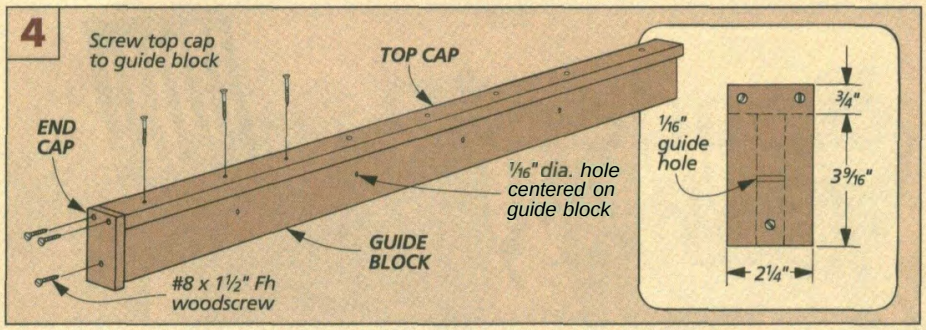

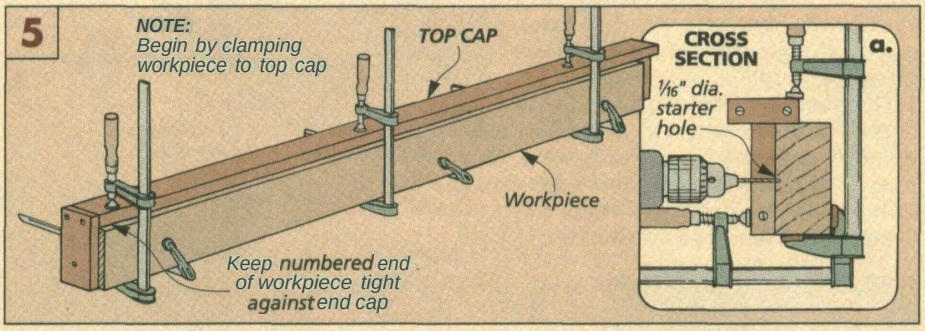

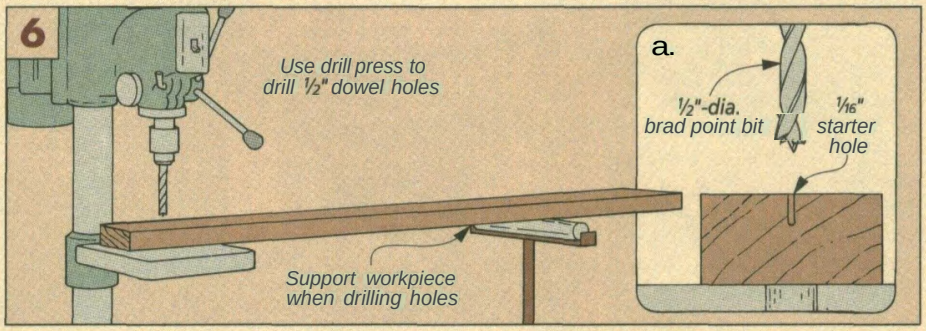

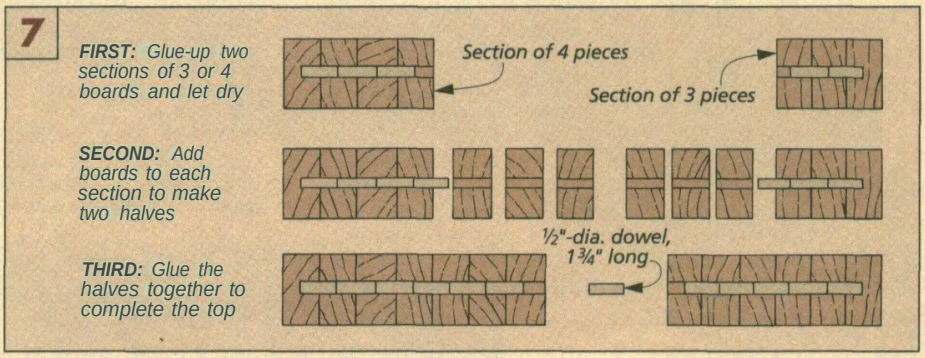

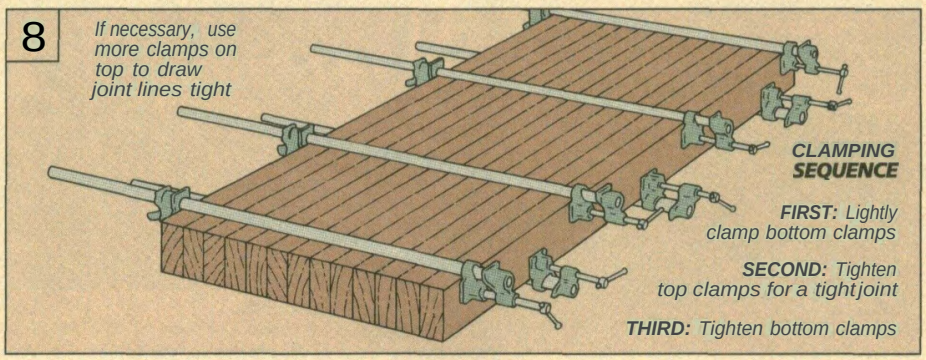

Readers' Gallery

Over the years, a lot of readers have sent us photos of projects they've built from *Woodsmith*. Plus, we've received hundreds more since I announced this gallery in the Sawdust column a couple of issues ago.

Of course, we couldn't include every photo. What you see here is a sampling of the craftsmanship and ingenuity of our readers. Some followed our plans closely; others adapted them quite a bit. We hope you enjoy seeing these completed projects as much as we have.

Oak Rocking Chair (Issue 84)
Tom Baker
San Diego, California
Editor's Note: Tom used black walnut to build his oak rocker.

Classic Workbench (Issue 50)
Donald Jacoby
Arvada, Colorado

Saw Cabinet (Issue 47)
David Kerski
Eden Prairie, Minnesota
"This photo was taken in my library because my shop was too small."

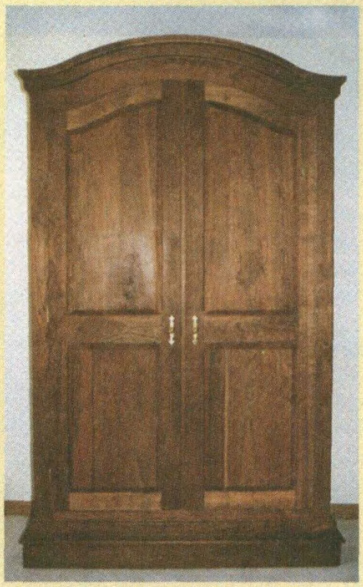

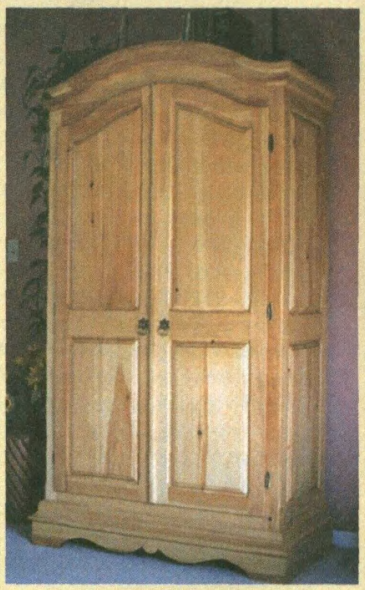

Armoire (Issue 67)
Bill Evans
Rehoboth, Massachusetts

Armoire (Issue 67)
Bob Schuchard
Fort Collins, Colorado

Editor's Note: Most readers customize our projects to some extent. Bill Evans cherry armoire looks just like ours but has drawers inside. Bob Schuchard's pine armoire has a scalloped base and raised panels on the sides.

Regulator Clock (Issue 36)
Chris Hellmuth
Middle Island, New York

Pedestal Desk (Issue 79)
R. E. Corbett, Jr.
Wilmington, North Carolina
"This is the only piece of furniture in our house that both children have requested when I die."

Classic Roadster (Issue 51)
Frank Pino
Edwardsville, Kansas

Garden Bench (Issue 93)
Bill Kilpatrick
Enniskerry, County Wicklow, Ireland

Rocking Horse (Issue 65)
William Murray
London, Ontario

Tall Case Clock (Issue 70)
Steve Hart
West Linn, Oregon

Oak Icebox (Issue 36)
Ron Anderson
Atlanta, Georgia
"I'm brand new to woodworking. My wife complains about never seeing me anymore, but after seeing my first results, she has slacked off a little."

Curved-Front Table (Issue 77)
Mark Hoecker
Charlotte, North Carolina

Heirloom Cradle (Issue 48)
Robert Kubiak
Omro, Wisconsin

Country Coat Rack (Issue 86)
Bob White
Muskegon, Michigan

Sewing Box (Issue 78)
James Stephens
Ladson, South Carolina
"I used old pine pallets for the wood to build this sewing box."

Country Pie Safe (Issue 55)
John Zelenak
Toms River, New Jersey

Blanket Chest (Issue 32)
Jack Couch
Pinson, Tennessee

Country Hutch (Issue 96)
Bud Migues
Penn Valley, California
"Antiquing this hutch took seven different finishes."

Ladder-Back Chairs (Issue 64)
Lloyd Arundale
Ridge, New York
"The dining room chairs were the most challenging. I started with six and ended up with five."

Porch Swing-Glider (Issue 39)
James Galluzi
Poughkeepsie, New York

Dovetail Chest

The charm of this small chest is created with two "old" woodworking techniques: cutting dovetails by hand and brushing on a few coats of shellac.

You don't want to rush hand-cut dovetails. They require careful, deliberate work. That doesn't mean they have to be perfect. After all, hand-cut dovetails aren't going to be machine-precise — especially with wide panels. But that fits the charm of this chest perfectly.

There's something to be said for a few quiet hours in the shop. Working without the roar of a router or breathing the clouds of dust. Okay, so the pace is a little slower, and the process takes a little longer. This is one time to throw out the schedule. If you can put yourself in the right frame of mind, the process is its own reward.

Come to think of it, applying the finish to this chest is rewarding too. I wanted it to match the "antique" character of the chest. And what better way than to use an "antique" finish?

Shellac has been used on furniture a long time, and its color adds a natural warmth that's hard to get from an off-the-shelf stain.

Of course, many woodworkers think of shellac as a "delicate" finish. And while it may not match the durability of polyurethane, a lot of antiques finished with shellac have put up with years of wear. And it's not difficult to apply either. For step-by-step instructions, see the box on page 23.

Construction Details

Overall Dimensions: **38⅛"** x **19⁹⁄₁₆"** x **18⅛"**
Wood: *Pine - 43 bd. ft.*
*(See **Materials** list, Supplies **list,** and cutting diagram on page 23.)*
Finish: *One coat of orange shellac*
Two coats of blonde shellac

EXPLODED VIEW

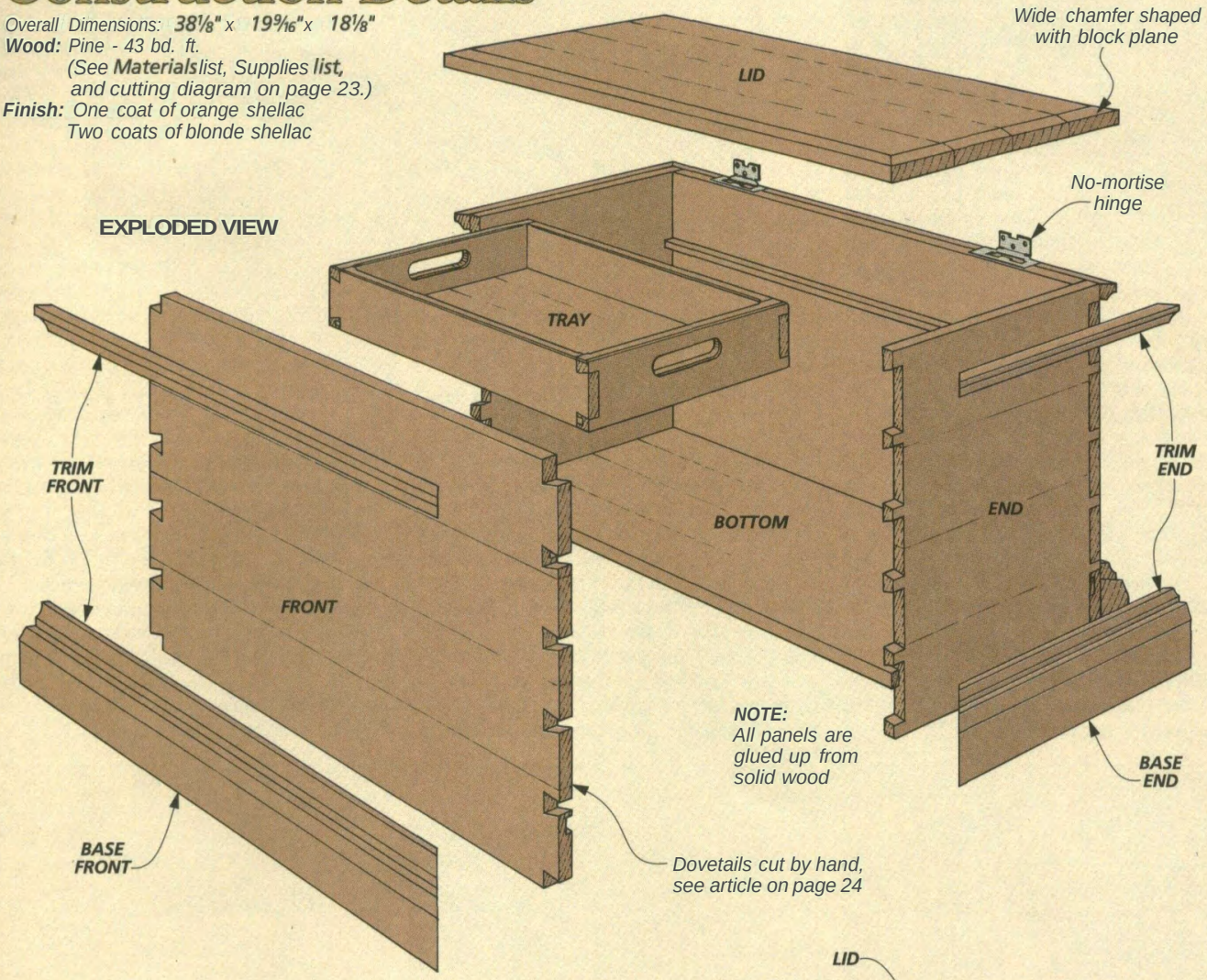

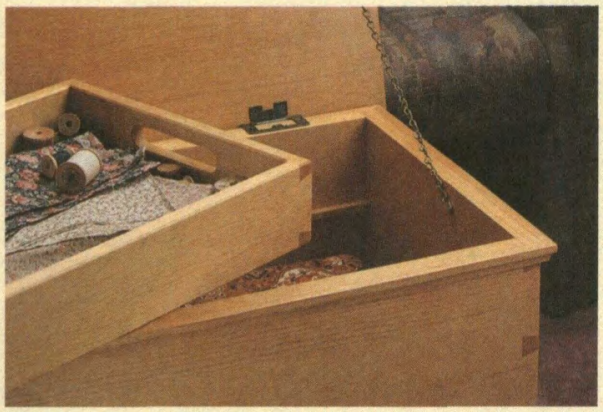

Sliding Tray. *Like the case, the sliding tray inside the chest is joined with hand-cut dovetails. This tray sits on simple supports glued into the front and back of the case.*

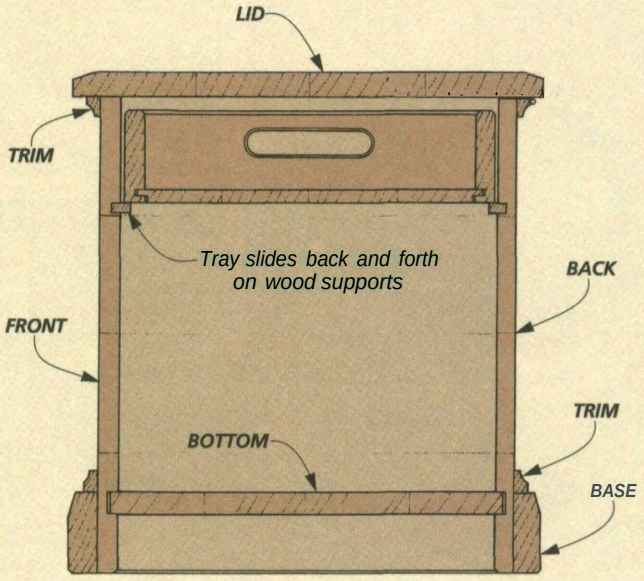

END VIEW
CROSS SECTION

CASE

This dovetail chest starts out just as you'd expect: gluing up oversized panels. There isn't anything unusual or difficult about these five ¾"-thick panels. The important thing is that they are flat and all the same thickness. This will make it much easier when it comes time to cut the dovetails.

After the panels are glued up, the next step is to cut the **front/back (A)** and **end (B)** panels to finished size, see the drawing at right. (The bottom will be cut to size later.) I began by simply ripping each of these panels to width. But when crosscutting, the long panels require some extra support. To do this, I added a long auxiliary fence to the miter gauge. This way, it's much easier to get the panels square.

DOVETAILS. After the panels are cut to size, work can begin on the dovetails. The dovetails are laid out 3½" on center, see Fig. 1. This allows for 3" tails and ½" pins.

Actually, not all the pins are ½". The top one is a little wider (1"). But the extra width is covered by some molding added later, see Fig. 2 and the drawing on the next page.

Note: In the article beginning on page 24, there are step-by-step instructions for cutting dovetails by hand.

GROOVES. When the dovetails are complete, there are some grooves to cut in the panels before you can assemble the case.

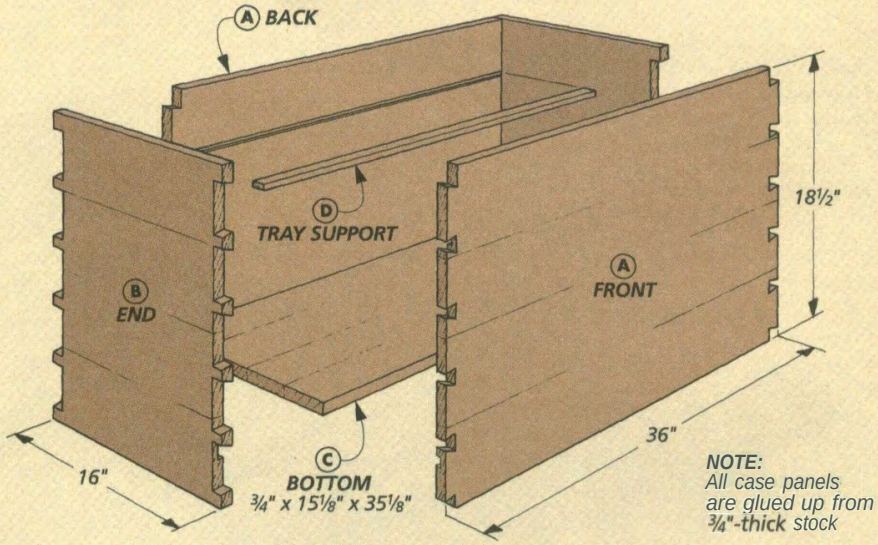

The first groove, near the top, is for the tray supports. It's ⅜" wide and cut in the front and back panels only, see Fig. 3. I centered these grooves in one of the pin openings. This way the pins on the ends will hide the grooves when the case is assembled.

The other groove is for the bottom of the chest, see Fig. 4. It's ¾" wide and cut in all four pieces. This groove cuts through a tail, so it'll be visible from the outside when the case is first assembled. But don't worry about this. Later, the groove will get covered by the molding at the bottom of the case.

BOTTOM. Now it's time to begin work on the bottom panel. But to do this, first you need to dry assemble the case. Then you can measure the case opening for the final size of the bottom, see drawing above.

Because the bottom is a solid wood panel and not plywood, it needs enough room to expand and contract with changes in humidity. To allow for this movement, I cut the **bottom (C)** ⅛" smaller than the opening, see Fig. 4a. (Mine was 15⅛" x 35⅛".)

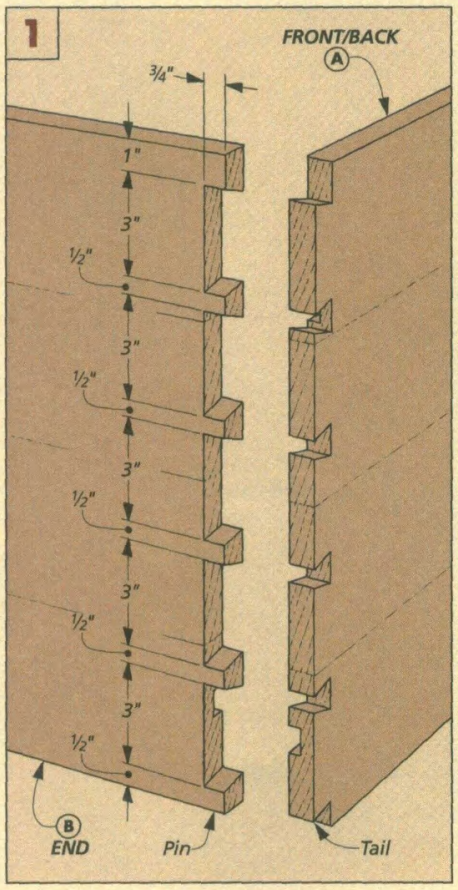

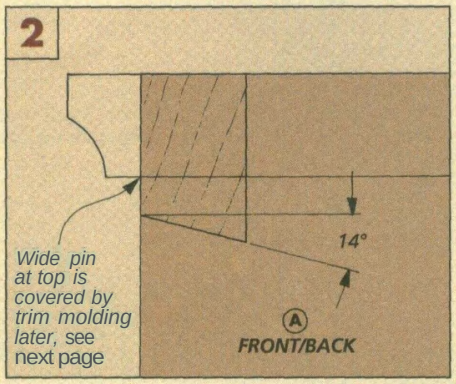

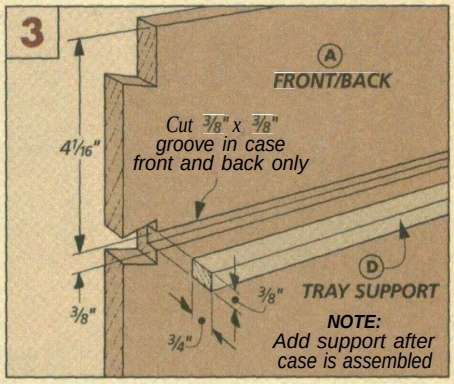

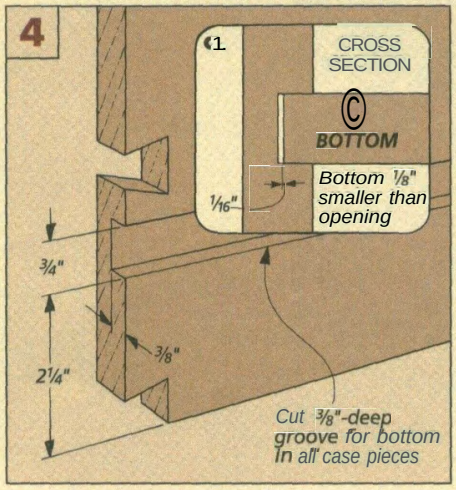

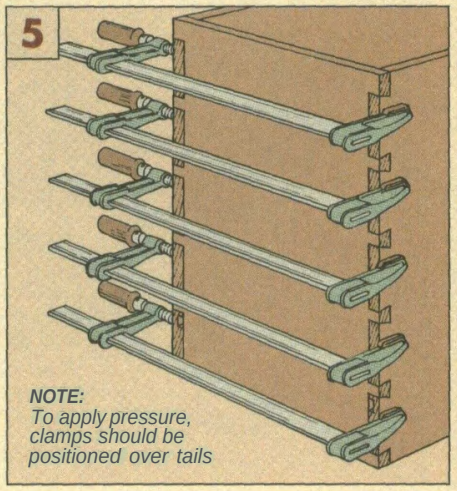

CASE ASSEMBLY. After the bottom panel is ready, you can glue the case together, see Fig. 5. (But don't use glue on the bottom.) This takes quite a bit of time, so I used white glue. It gives you a little more time to work.

While the glue is drying, cut two **¾"-wide tray supports (D)** to fit in the grooves inside the case, see Fig. 3. This time, I wanted the glue to set up fast, so I used yellow glue. That way, I didn't have to worry about using clamps. Applying a little hand pressure for a minute or two was all it took.

At this point, the case is essentially complete. But if there are pins or tails protruding, you'll need to sand them flush with the sides of the case, see the Shop Tip at right. Once that's done, all that's left is to add the base and some trim molding around the top and bottom, see the drawing below.

BASE. I like the wide, thick base molding I've seen on some older chests, and I wanted the base on this chest to look the same. So instead of using ¾"-thick stock, I cut the base pieces from 1 1/16"-thick stock.

The **base front/back** (E) and **base ends** (F) are first cut to rough length from 3"-wide blanks. Next, cut a decorative chamfer along the top edge, see Fig. 6. I did this on the table saw with the blade angled 15°. Then to complete the base, miter the pieces to length and glue them to the case.

TRIM MOLDING. The next pieces to add are some strips of trim molding, see drawing below. Some of this trim will sit on top of the base molding. The rest will end up flush with the top of the case.

To make the **trim front/back (G) and trim ends (H),** start with blanks that are ½"thick and 2" wide, see Fig. 7. Rout a cove along two edges using a ½" cove bit. Then two ¾"-wide (tall) trim pieces can be ripped from each blank. Miter the pieces to length and glue them in place. (The cove profiles should face each other.) Here again, don't worry about attaching the molding with clamps. A little hand pressure works fine.

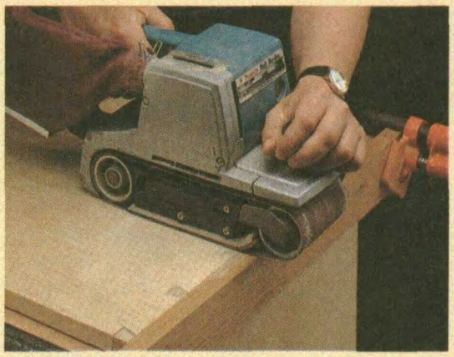

Shop Tip: *When using a belt sander, it's easy to round over a corner. To prevent this, clamp a scrap piece across the end.*

Finally, to prevent chipping the edge if the chest ever gets dragged across the floor, rout a ⅛" chamfer on the bottom edges of the case and molding, see Fig. 8.

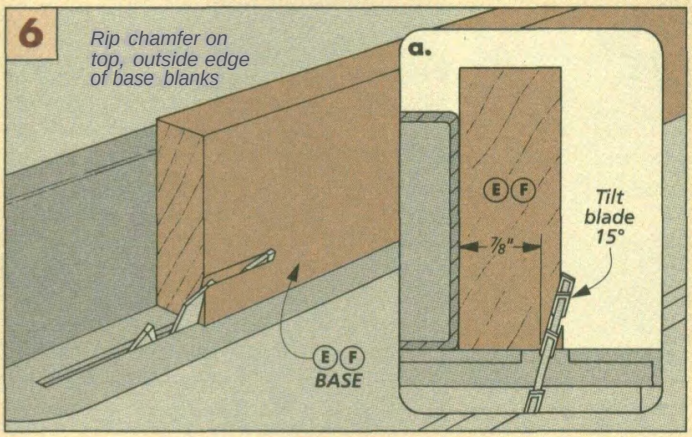

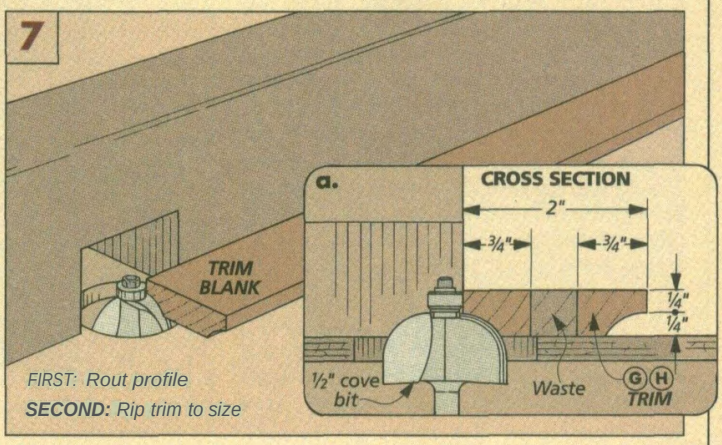

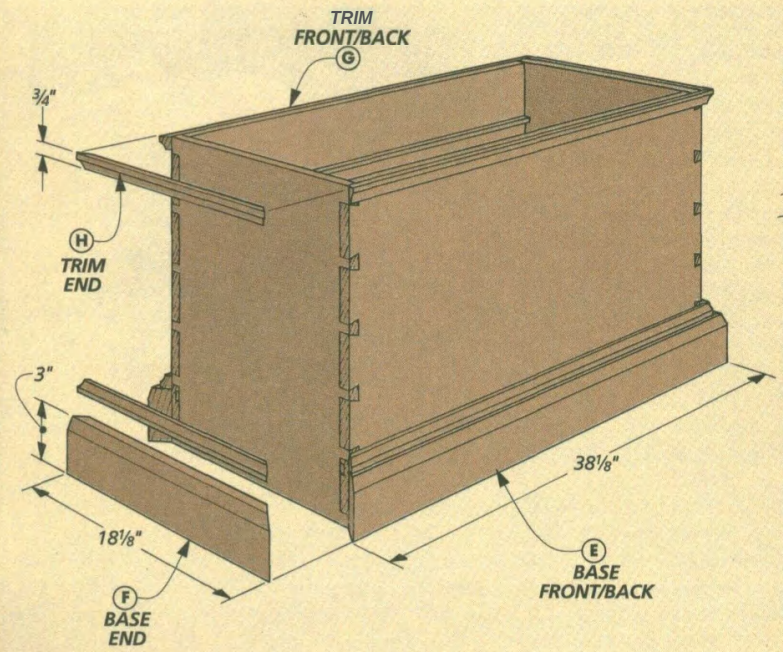

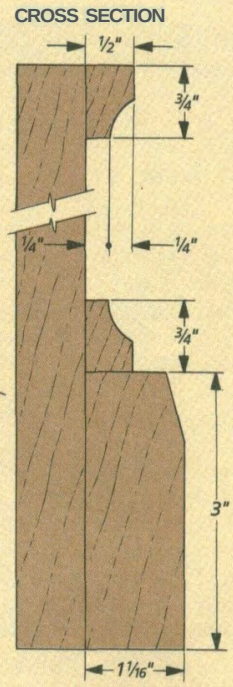

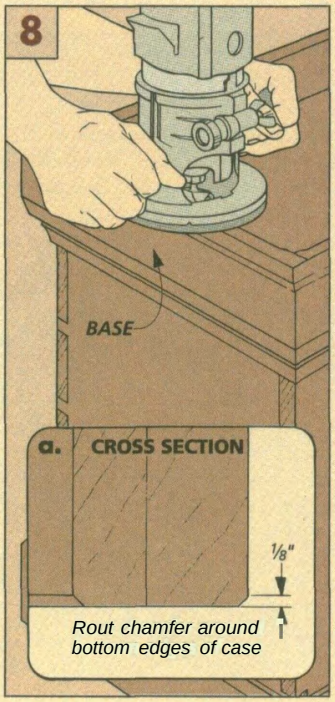

LID

Now that the case is complete, I started work on the lid, see drawing at right. Just like the other parts of the case, this means you need to glue up another panel. But the thickness of this panel is different: it's 1 1/16".

Since you lift the lid from the edges, I wanted it to overhang the case a bit. So to determine the size of the lid (I), measure the case (including the trim) and cut the lid panel 1" longer and wider.

CHAMFER. I also wanted the lid to have the same chamfer that's around the base. But the panel is too long to stand on end on the table saw. So I used a block plane.

Before planing, lay out the edges of the chamfer, see Fig. 9. Then plane down to these lines, starting with the ends of the lid. To avoid **chipout,** skew the plane slightly so the cut shears off thin shavings.

HINGES. When the chamfer is cut, mount the lid to the case. To do this, I used a special hinge. It has an offset barrel and doesn't require a mortise, see Fig. 10.

To mount the hinges, first screw them to the case. Next, set the lid on top of the case and center it side-to-side and **front-to-back.** Then simply trace around the barrels of the hinges on the bottom of the lid. Now remove the lid and hinges. Then screw the hinges to the lid and **reattach** the hinges to the case.

LID SUPPORT CHAIN. The last thing to do to the lid is add a **15"-long** piece of brass chain to the inside of the case, see Fig. 10. This prevents the lid from dropping back.

Safety Note: If children will be opening and closing this lid, you should protect their fingers by installing a lid support. (For sources, see page 31.)

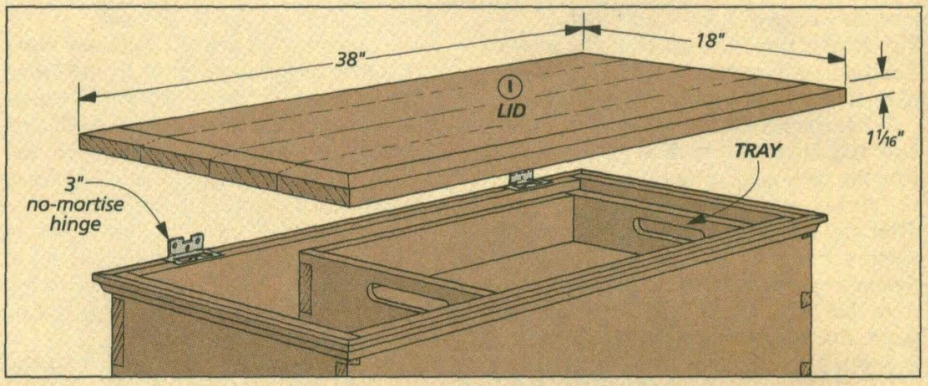

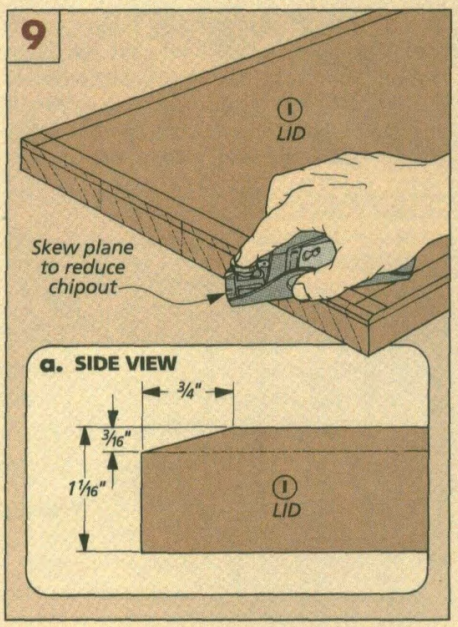

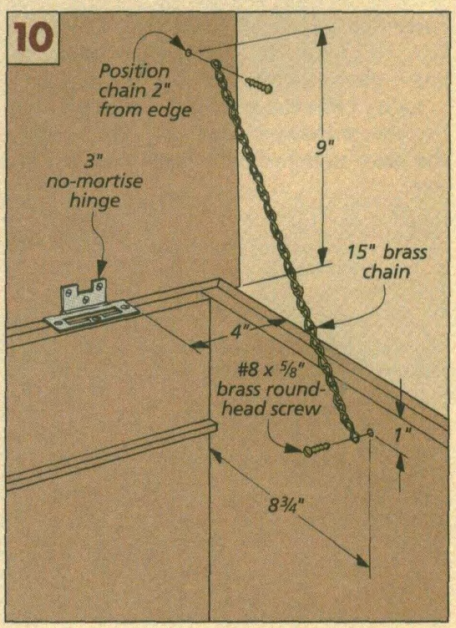

SHELLAC

When choosing a finish for this chest, I wanted a warm, "aged" color. But instead of trying to mimic an old finish, I decided to use the real thing: shellac.

For this chest, I applied one coat of orange shellac. The orange shellac gives the wood its warm color — and it doesn't blotch like a normal stain will. But more than one coat makes the wood too dark.

So to keep the color lighter but still add more protection, I applied two more coats of another "grade" of shellac: blonde shellac. (Shellac comes in several grades, see page 31.) Actually, this isn't a different type of shellac. It has just been purified more, so there's not much color.

Shellac comes ready-to-use or in flakes that must be dissolved in alcohol. (See page 31, for sources.) Once dissolved, it begins to slowly deteriorate. So, I use the flakes and mix my own. This way, I know it's fresh.

Though any alcohol will work, I dissolve shellac in denatured alcohol. Shellac is mixed in "pound cuts" — the number of pounds of flakes to a gallon of alcohol. For this chest I used a 2 lb. cut. But I only mixed up a pint of each grade (which requires 4 oz. of shellac flakes). And don't worry about being precise. Just get it in the ballpark.

Shellac doesn't dissolve like Kool-Aid. It takes several hours or more. Pour the flakes into a non-metal container. (The shellac reacts to metal.) Then pour in the alcohol and stir it. Let it set a bit. Then stir it again. It's a good idea to strain the shellac a few times before using it, see photo.

Before applying the first coat of shellac, I sanded the dovetail chest to 220-grit because the soft grain of pine tends to raise when shellac is applied.

To apply shellac, I use a natural bristle brush. The only trick is not to work the finish too much with the brush. The shellac dries fast, so you can apply another coat after about three hours. Note: If the shellac seems to be drying too quickly, then thin it a little with more alcohol.

I sanded the first coat *lightly* with 400-grit paper. Then after the two coats of blonde shellac were applied, I rubbed out the finish with 600-grit paper.

TRAY

With the lid attached, the last step is to build a tray that fits inside the case and slides back and forth on the tray supports.

First, the **tray front/back (J)** and **tray ends (K)** are cut to finished size. Then to join all the pieces of the tray, I cut the dovetails by hand — just like the case, see Fig. 11 and the drawing at right.

Next, I cut a **¼"-wide** groove ⅜" deep in each piece for the tray bottom, see Fig. 12. The bottom is another solid wood panel. This time, it's glued up from **½"-thick** stock, see drawing at right.

When the **tray bottom (L)** has been glued up, I cut it to finished size. The panel should fit inside the tray (including the grooves) minus ⅛". Of course, a **½"-thick** panel won't fit into a ¼" groove. But I cut a rabbet along the bottom edge of the tray bottom to create a ¼" tongue, see Fig. 12.

Next, I wanted to add some "handles" to the ends of the tray. These handles are simply slots drilled and cut in the end pieces, see Fig. 13. To do this, first drill 1"-dia. holes to establish the length of the handle slot. Then clean out the waste with a sabre saw. Now sand them and rout a small chamfer on both the inside and outside edges. Then the tray can be glued together.

With the tray assembled, there are two steps left. First you want to chamfer the inside and outside edges so there are no sharp corners, see drawing above right. And finally, don't forget to plug the holes in the end pieces that were created by the grooves for the tray bottom, see Fig. 14. ❑

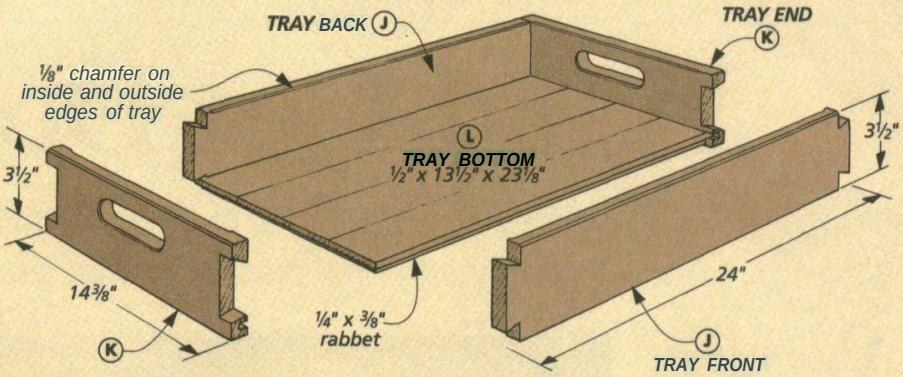

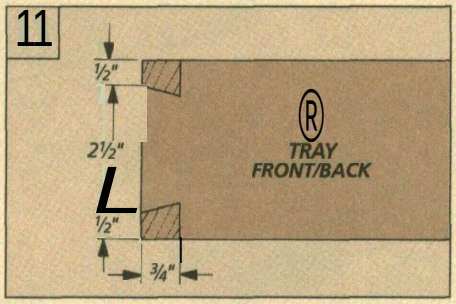

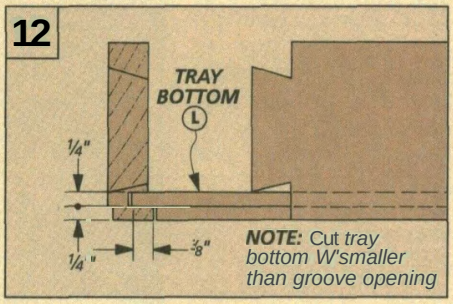

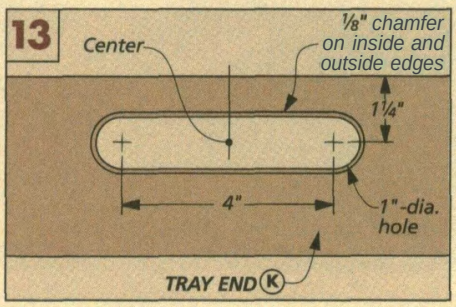

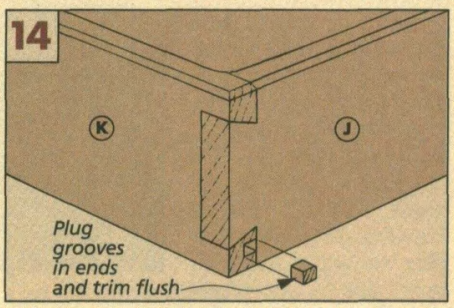

MATERIALS

A	Front/Back (2)	¾ x 18½ - 36	G	Trim Front/Back (4)	½ x 3/4 - 40 rgh.
B	Ends (2)	¾ x 18½ - 16	H	Trim Ends (4)	½ x ¾ - 20 rgh.
C	Bottom (1)	3/4 x 15⅛ - 35⅛	I	Lid (1)	1 1/16 x 18 - 38
D	Tray Supports (2)	¾ x ⅜ - 34½	J	Tray Front/Back (2)	¾ x 3½ - 24
E	Base Front/Back (2)	1 1/16 x 3-40 rgh.	K	Tray Ends (2)	¾ x 3½ - 143/8
F	Base Ends (2)	1 1/16 x 3 - 20 rgh.	L	Tray Bottom (1)	½ x 13½ - 23⅛

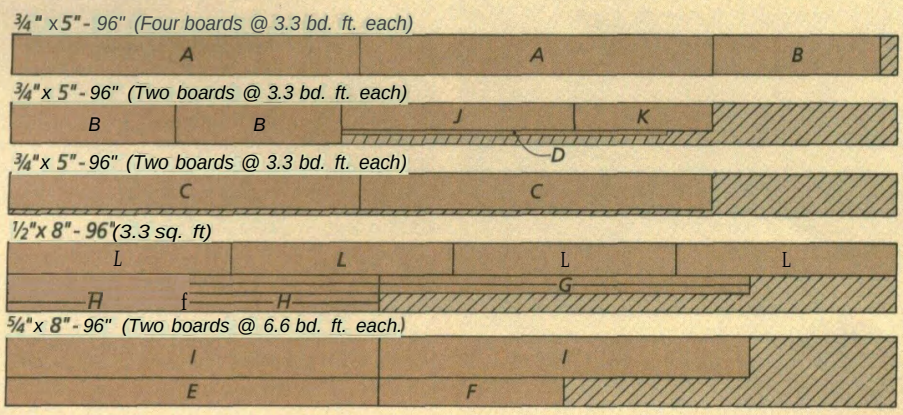

SUPPLIES

- (1 pair) 3" No-mortise Hinges
- (1) 15" Brass Chain
- (2) #8 x ⅝" Brass Rh Screws

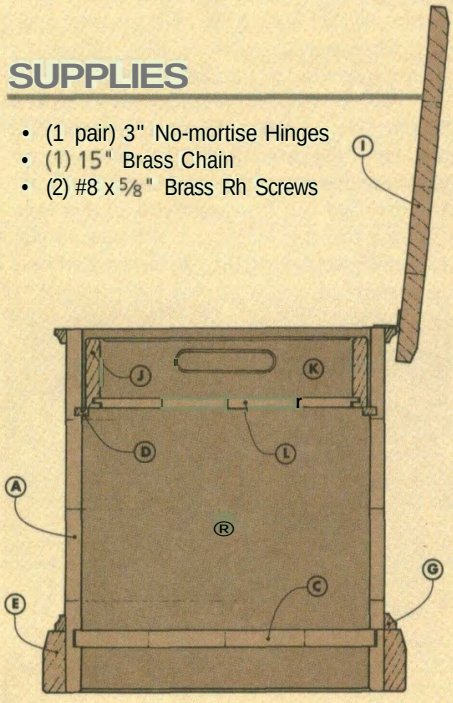

Hand-Cut Dovetails

A step-by-step approach to cutting dovetails in wide panels. Plus, some techniques for assembly and a few troubleshooting tips.

Which comes first, the pins or the tails? Frankly, you can cut them either way, but I start with the pins. It's how I was taught and how I always cut them.

WHICH IS WHICH? But maybe I'm jumping the gun. After all, when looking at this interlocking joint, it can be hard to tell which one is the tail and which is the pin.

The trick is to look at just the face of the board, not the ends, see Fig. 1. The tails flare out — like a dove's tail. And from the face, the pins are straight, sort of like box joints. The pins slide in between the tails, but unlike box joints, they can only slide in one direction. The angled sides act as wedges, so you can't pull them apart any other way.

PINS FIRST. So why do I cut the pins first? There are a couple reasons. First, I think the pins are easier to cut. But it's also easier to cut them accurately. (And if they don't end up perfectly square to the baseline, it's easy to clean them up so they are.) This is important because after the pins are cut, you'll use them to lay out the positions of the tails. (Laying out the tails from the pins is also easier than marking the pins from the tails.)

STOCK PREPARATION. Regardless of which panel you start with, the pin panel or the tail panel, your first step is always going to be the same: stock preparation.

FLAT & SQUARE PANELS. Whether you're dealing with narrow boards or wide panels, each piece must be flat and smooth. And the ends of the boards must be square. In fact, all they should need is a little finish sanding.

ORIENTATION. When you're satisfied the panels are as flat and square as you can get them, the next thing to do is arrange the panels. The idea is to orient them so the finished project will look its best when it's put together.

When the panels are oriented just so, I label the outside and inside faces, as well as the top edges, see Fig. 2. Also, it's a good idea to label adjoining corners with a letter. These steps don't really take much time, and when you transfer the pins to the mating tail panels later, the labels will save you a lot of head scratching.

BASELINE. Finally, I mark a baseline around the ends of each panel, see Fig. 3. The baseline equals the thickness of the workpieces. It shows where to stop cutting.

To lay out the baseline on wide panels Gike those on the dovetail chest in this issue), I use an adjustable square and a pencil, see Fig. 3. Just set the adjustable square to the thickness of the panel.

Note: If you're working with small pieces, the easiest way to lay out the baseline is to use the boards themselves. Stand up one board and place it against the end of the adjoining piece. Then simply trace around it.

Now when all the panels are ready, you can begin work on the pins.

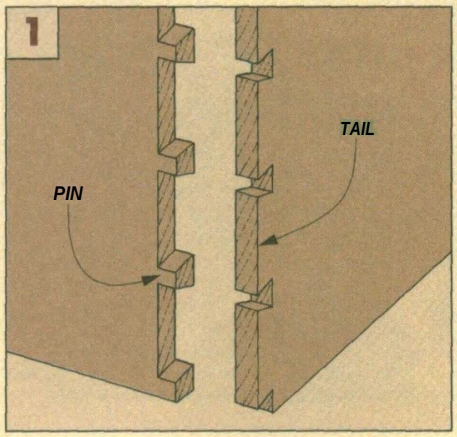

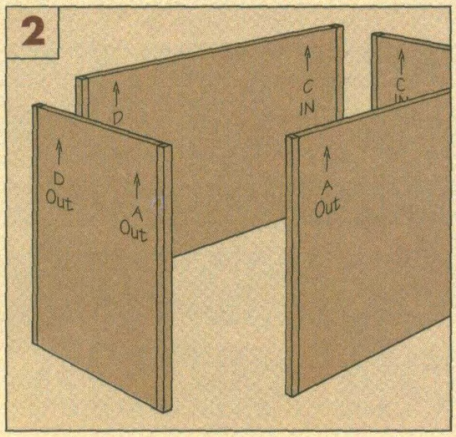

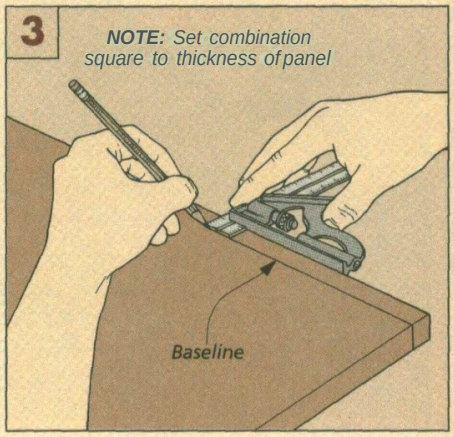

PINS: *STEP-BY-STEP*

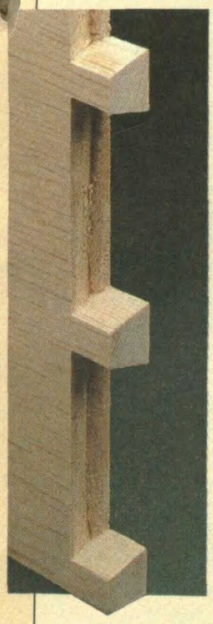

When cutting pins, there are three things to do: lay out the pins, make cuts on each side of them with a hand saw, and clean out the waste between them.

LAYING OUT. The first step is to lay out the position of the pins. I start with the outside face toward me (the one with the narrowest part of the pins).

Next, the layout can be drawn around to the inside face. To lay out the angles across the ends, I use a bevel gauge, see Step 2.

In softwoods, this angle is usually greater than in hardwoods. (I used 14° for the chest and 9° for the hardwood drawer on the workbench in this issue.)

Shop Tip: For a quick, easy set-up gauge, miter a scrap piece at the angle you need.

When the pins are laid out, I always mark the waste sections. This makes it harder for me to cut on the wrong side of the line.

All this marking and laying out may seem to take a lot of time. But it really does pay off in the end. The key to making dovetails as simple and accurate as possible is to be able to see exactly what you're doing.

CUTTING THE PINS. At this point, the pins can be cut, see Step 4. Here, it's important to keep the hand saw straight up and down so the pin ends up square to the baseline.

Again, I always keep the outside face toward me. This way, I can be extra careful with the good face. And if I'm off the line a bit on the inside face, it won't be visible.

Note: If you don't feel confident using a hand saw, just stay a bit more on the waste side of the line. There will be more clean up with the chisel, but you won't have to worry about gaps when the joint is assembled.

REMOVING THE WASTE. When all the pins are sawn, the last thing to do is clean out the waste between them, see Steps 5-7.

Here, I do two things. To ensure a clean, straight baseline, I clamp a backing board to the panel. But this board can shift out of position. Especially when you start pounding on the chisel with a mallet. So to prevent this, I begin by removing tiny "bites."

Another thing I do is undercut the shoulder, see Step 6. After about 1/8" is removed, I'll angle the chisel slightly toward me when chopping out the waste. This way, it's easier to get a good, tight fit.

When all the waste is removed, you'll need to spend a little time cleaning up all the corners. And now's a good time to check that each pin is straight and square, making any adjustments if necessary, see Step 8.

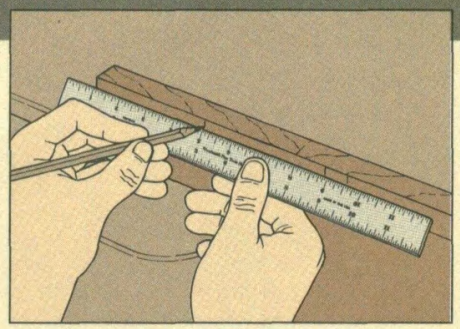

1 *First, secure the panel with the outside face toward you. Then, lay out each pin on the face of the panel. (This will be the narrowest part of the pin.)*

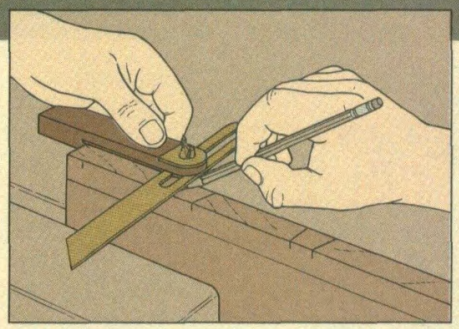

2 *To lay out each pin on the ends of the panels, first set the bevel gauge. Then hold a pencil on the mark, butt the gauge to the pencil, and draw the angled line.*

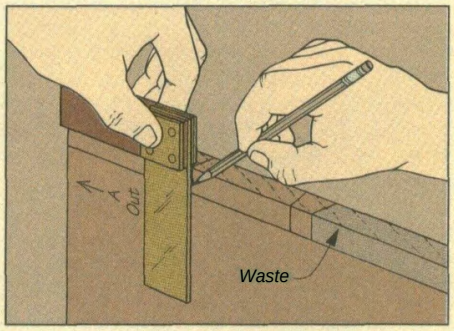

3 *Next, draw lines from the ends down to the baseline. Then mark the waste sections between the pins. Do this on both the inside and outside faces of each panel.*

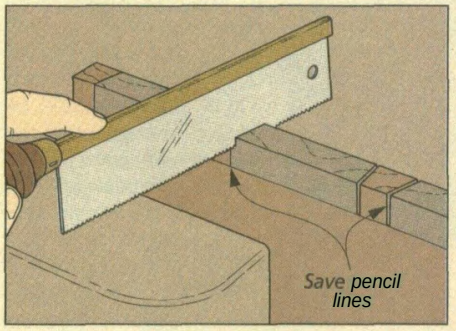

4 *The sides of the pins are formed by cutting to the waste side of the lines with a fine-tooth saw. Stop when the kerf has reached the baseline on both sides.*

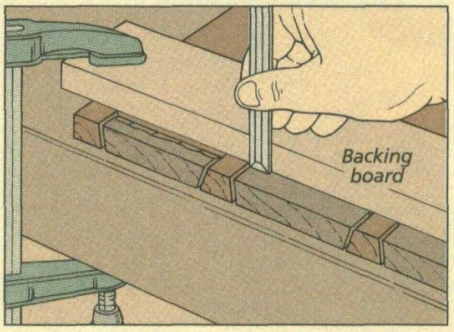

5 *To remove the waste between the pins, first clamp a backing board along the baseline. Then with a sharp chisel, carefully establish a small shoulder.*

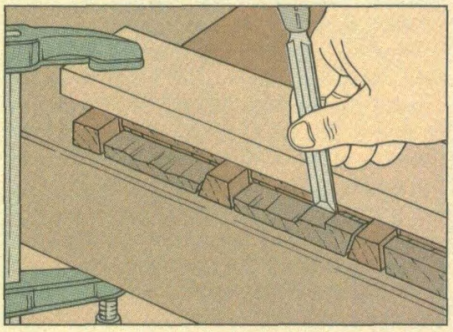

6 *Now to remove the waste, chop straight down. Then chip out the waste from the ends. After removing an 1/8", tilt the chisel slightly and undercut the shoulder.*

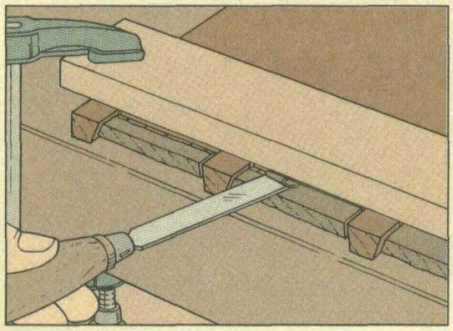

7 *When half the waste is gone, flip the panel over and clamp the backing board in place again. Then repeat the procedure to remove the rest of the waste.*

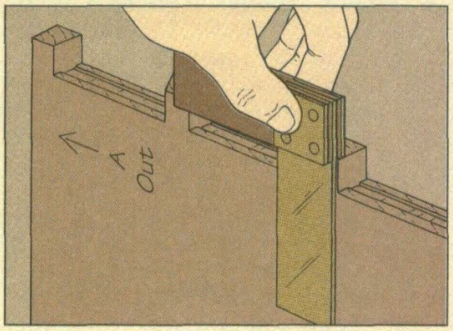

8 *After cleaning up the corners with a chisel, make sure each pin is straight and square to the end of the board. Correct any bad saw cuts with a chisel.*

TAILS: *STEP-BY-STEP*

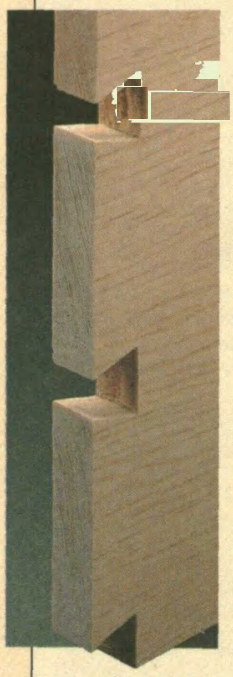

After the pins are complete, it's time to work on the tails. I laid out the pins with a ruler and a pencil, but the tails are different. They need to be cut to fit the pins. So instead of using a ruler, I mark the tails directly from the pins. This way, they will match them perfectly.

LAYING OUT. To lay out the tails, the first step is to set the tail panel on the workbench with the inside face up. Then stand the pin panel on top so the two panels form a corner. These panels should be flush at the ends and the edges with both inside faces toward each other.

Here's where all that marking at the beginning really helps. It's important that the corresponding corners match when laying out the tails. And both panels should be oriented correctly.

Shop Tip: To help the panel stand upright, I clamp a piece of scrap to the panel with the pins before setting it on the tail panel, see Step 1. This also helps remove any slight cupping that may be in the panel.

Now that the tails are marked on the inside face, the lines can be transferred around the panel to the outside face, see Steps 34. Drawing the straight lines across the ends of the panel is easy. But to transfer the angles to the outside face, you'll need to use the bevel gauge again.

To be safe, I don't just draw the same angle I used to draw the pins. Instead, I check each angle on the inside face, adjust the bevel gauge if necessary, and then transfer this angle to the outside face.

CUTTING THE TAILS. Cutting the tails is different than cutting the pins. This time, the saw isn't straight up and down — it's angled instead, see Step 5. This means starting the cut is a little trickier. So I usually start more toward the waste side of the line. (Mark the waste sections on the tail pieces if you haven't done so yet.) This leaves me with more to clean up, but the dovetails fit together without any gaps.

REMOVING THE WASTE. With all the kerfs cut, the last thing to do is remove the waste.

But this time, start with the dovetail saw and remove the waste sections for the pins at the top and bottom of the panel, see Step 6. Then clean up the shoulders with a chisel.

Now you can clean out the rest of the waste between the tails. There's nothing tricky here. There's just not quite as much room to work as with the pins, see Steps 7-8.

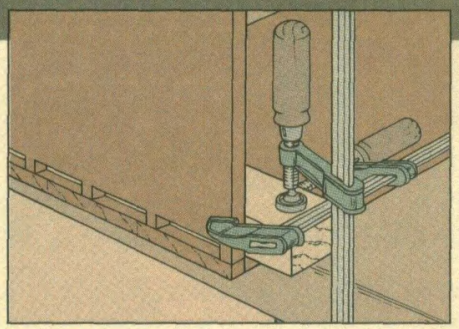

1 *To lay out the tails from the pins, first set the tail panel on the bench with the inside face up. Then set the pin panel on top so mating edges align.*

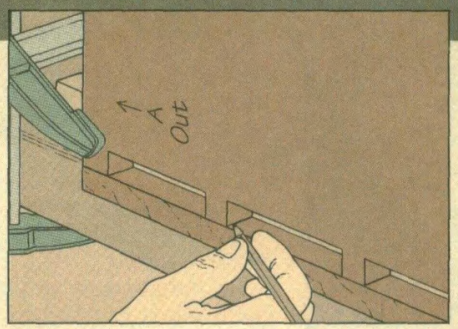

2 *Now, make sure the two panels are flush at both the end and the edges. Then carefully trace the pins onto the tail panel using a sharp pencil.*

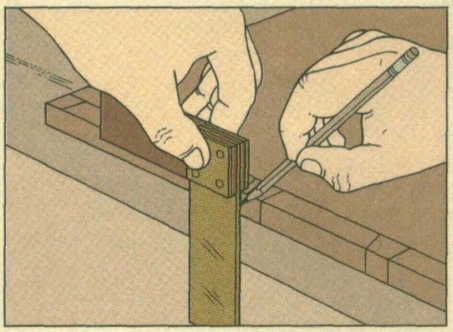

3 *Next, to extend the lines around the panel, draw parallel lines across the ends. To do this accurately, position the pencil. Then slide the try square up to it.*

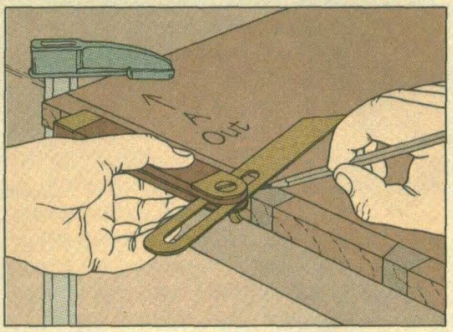

4 *Now transfer the angles on the inside face to the outside face. Adjust the bevel gauge to match the angle on the inside face. Then draw it on the outside face.*

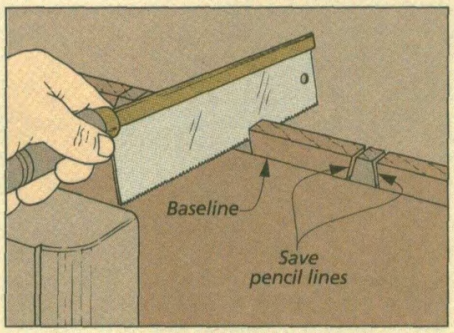

5 *To form the sides of the tails, hold the saw at an angle and begin cutting, staying on the waste side of the line. Stop when the kerf reaches the baseline.*

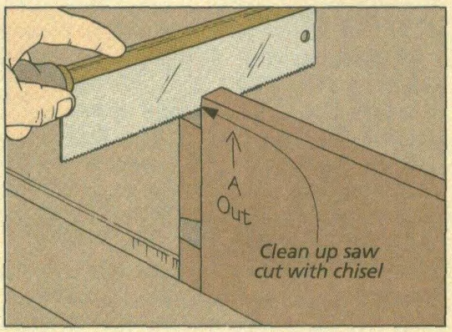

6 *To remove the waste for the pins at both the top and bottom, use the saw, cutting from the edges toward the first tail. Then clean up the cuts with a chisel.*

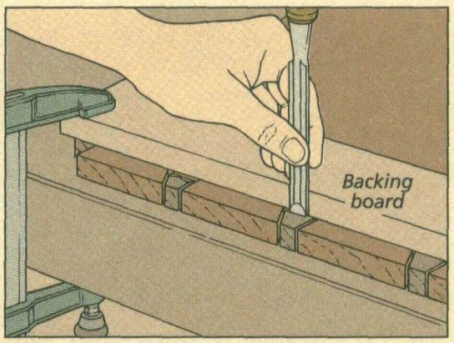

7 *Now to remove the waste between the tails, use the same procedure as the pins. Begin by clamping a backing board to the panel and establishing a shoulder.*

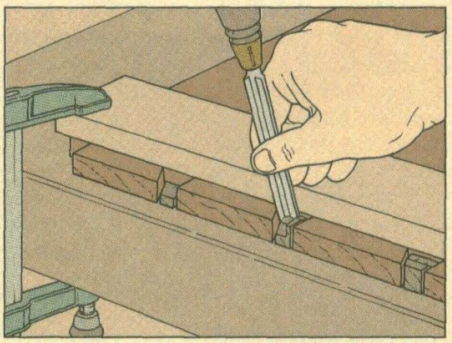

8 *Remove half the waste. Then flip the panel over and repeat the process. If the saw cut didn't follow the line, use a chisel to clean up the tails.*

FITTING & ASSEMBLY

At this point, the joint can be assembled. But first, you need to do some fitting.

FITTING. To get the joint to fit, you're probably going to need to remove a little material from either the tails or the pins. But to see just where to remove this material, the joint should be dry assembled (as much as possible), see photo at right.

But don't force it. If you do, the pins at the top and bottom can split from the pressure. The goal is a fit that can be dry assembled with a few light taps of a mallet

With the joint dry assembled as much as possible, take a close look at each pin and dovetail. You should be able to see where the joint is binding. And when you pull the joint apart, the tight spots will also be burnished slightly. To make these areas easier to see, I like to mark them with a pencil, see the photo at right

CHISEL. There are a couple ways to fit the dovetails. To remove a lot of material, you can pare it away with a chisel, see Fig. 1. This removes the wood pretty fast, but it's also easy to remove too much material.

SANDING **STICK.** So I often use a little sanding stick, see Fig. 2. Basically, this is a thin piece of scrap wood with some adhesive-backed sandpaper attached. I bevel the edges to match the angle of the tails. This way, I can sand right into the corner.

ASSEMBLY. When all the joints fit, the case (or drawer) is ready to be assembled, see Fig. 3. I use white glue when assembling large cases. It has a longer set-up time than yellow glue, which helps with all the small faces that need to be glued.

I usually apply glue just to the sides of the pins and tails. I don't bother gluing the baseline since it's end grain.

Clamping up dovetails usually takes a little preparation. You only want to apply pressure to the tails (not the pins).

This isn't a problem with wide dovetails like those on the chest. But if you don't have many clamps, you can distribute the clamping pressure evenly across the joint with a special clamping block, see Fig. 3. (This block also works when the clamp head is bigger than the tails, as on a drawer.) ❑

Use sharp chisel to carefully pare away material

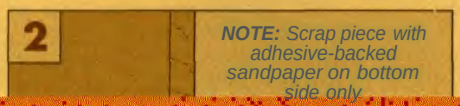

NOTE: Scrap piece with adhesive-backed sandpaper on bottom side only

Notched clamping block distributes pressure evenly

TROUBLESHOOTING

It's a great feeling when the pieces finally come together and you've perfected your dovetail joint. The trick is to cut each keep through slightly on the tails, but not quite to the baseline. Then fit the joint dry as much as possible, see photo at right. Then, use a sharp chisel to carefully pare away material, see Fig. 1. Next, place spline in the kerf and trim flush, see Fig. 2. Finally, add a little glue and clamp up the joint, see Fig. 3. Then, you're done! But if the joint isn't quite perfect, see page 30.

PROTRUDING TAILS & PINS. One common and much bigger problem. For instance, you may find that the tails or pins sticking out a little beyond the edge of the board. This is easy to correct with a little sanding, see the box on page 31. And if the tails or pins are much longer than the board, then the solution is to use a sharp chisel to fill the gap, see Fig. 2.

GAPS BETWEEN DOVETAILS. Gaps are a bigger problem. For instance, you may find that the tails or pins sticking out a little beyond the edge of the board. This is easy to correct with a little sanding, see the box on page 31. And if the tails or pins are much longer than the board, then the solution is to use a sharp chisel to fill the gap, see Fig. 2.

GAPS BELOW THE TAILS. There's another problem when the tails or pins are too short. Here, the gap appears along the baseline of the tails. Here, the tails are too short. Fortunately, such a problem is easy to correct. Just glue in a wedge and trim flush. You can use a hand saw.

To fill baseline gap, glue in wedges and trim flush

SECOND: Glue spline in kerf and trim flush

Three Board Shelf

This evening project makes use of a unique, invisible hanging system.

The nice thing about this shelf design is that it's just as easy to build three (or more) as it is to build one. Each requires about a board foot of lumber. And there are only three parts: two brackets and a shelf. Plus, there's a unique hanging system that's completely invisible.

BRACKETS. To build a single shelf, start with the two curved brackets. Their main purpose is to support the **shelf**, but I also **designed** them to hide the hanging hardware. (More on this later.)

To make the brackets (A), cut a blank to final width (4") but leave it long enough for both brackets. Then lay out and cut the shape of the brackets at each end of the blank, see Fig. 1 and the pattern below.

Before cutting the brackets to length, rout a **bullnose** profile on the front and curved edges. You don't need a special router bit to do this. Just use a ½" round-over bit in the router table with ⅜" of the cutting edge exposed, see Fig. 2. With the edges routed, cut the brackets to final size.

SHELF. For now, set the brackets aside and begin **work** on the shelf (B), refer to the drawing below left. I started with a blank 5" wide and 25" long, see Fig. 3.

With the blank **cut** to rough size, now drill four counterbored holes for attaching the

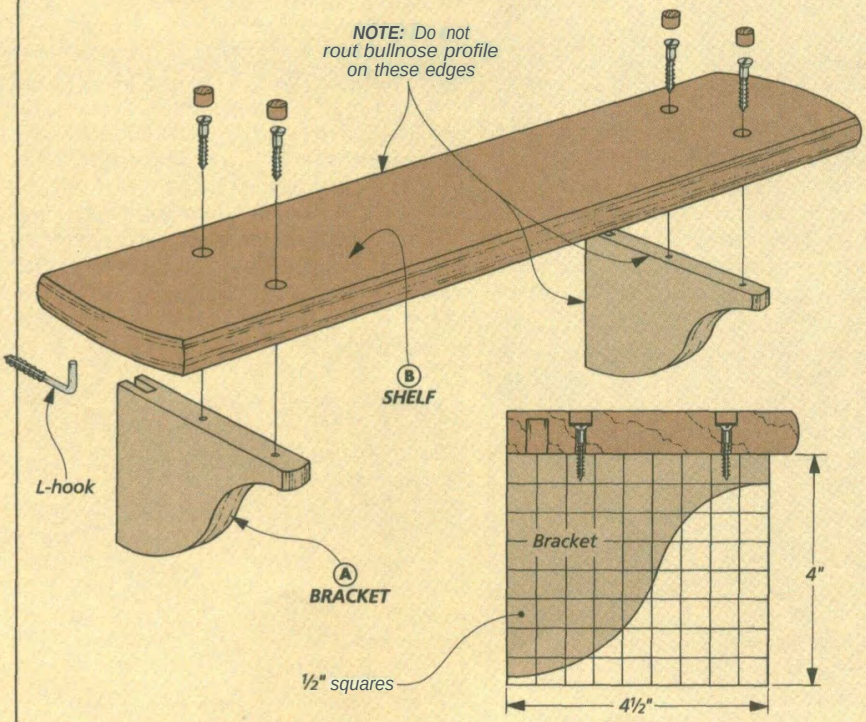

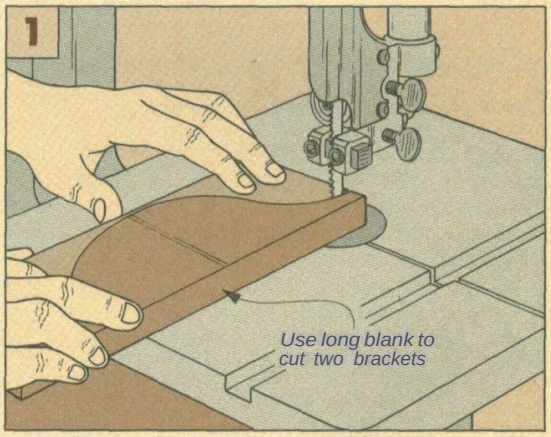

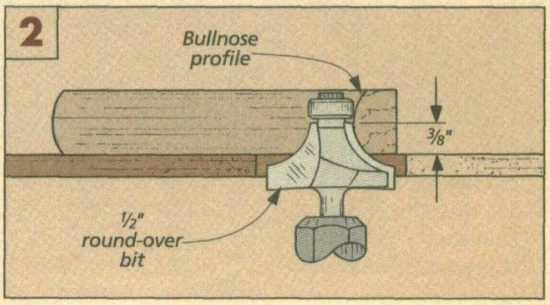

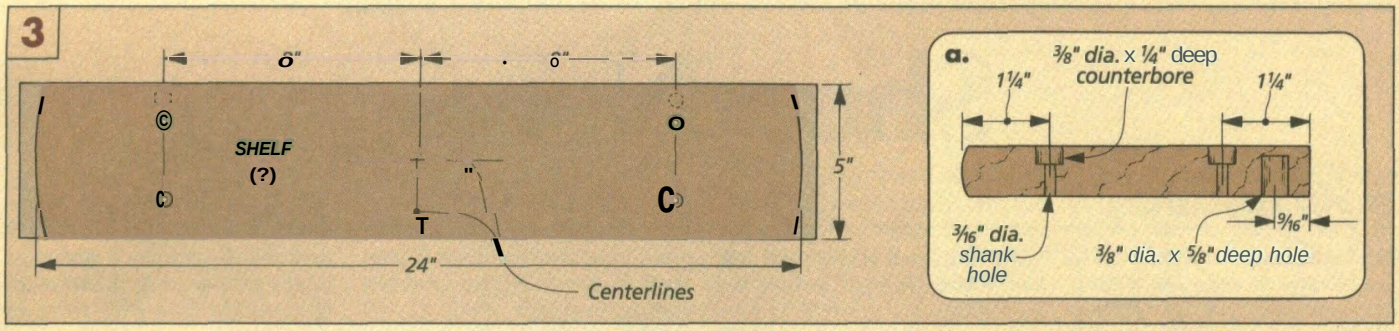

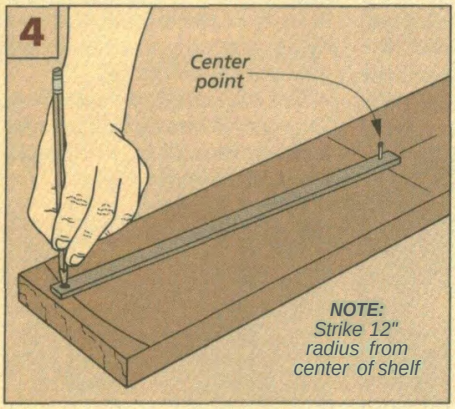

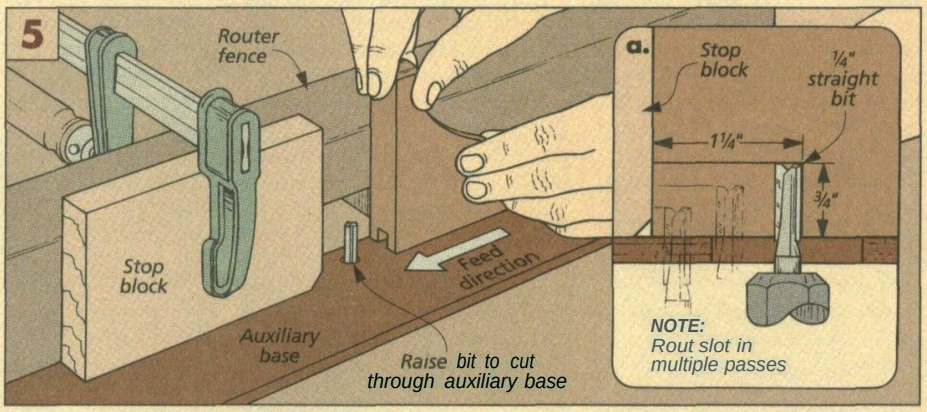

brackets, see Fig. 3a. These are measured from the center and are 16" apart.

Then, flip the shelf over and drill a couple holes in the bottom of the shelf, see Figs. 3 and 3a. These holes provide pockets for the hanging system to hook into.

Now, there are just a couple things left to do to the shelf. First, cut a gentle curve on each end, see Fig. 4. Then on the front and ends of the shelf, rout a bullnose profile just like the one on the brackets, see Fig. 2.

SLOTS. The shelf and the brackets are about ready to be screwed together, but there's still one more thing to do.

To hide the hanging hardware, you need to rout a slot in the back of each bracket, see Fig. 5. I did this with a 1/4" straight bit in the router table. And to make this procedure safer with such a small workpiece, I added an auxiliary base to cover the large opening in the table. Then I clamped a scrap block to the fence to act as a stop.

ASSEMBLY. With the slots cut, the shelf can be screwed together. Plug the holes with short pieces of 3/8" dowel and trim them flush, see Fig. 6. Then to finish the shelf, I wiped on a few coats of an oil finish.

HANGING SYSTEM. Okay, now it's time to hang the shelf. This shelf hangs on a couple common Lrhooks, see Fig. 7. They slide into the slots in the brackets and then hook into the holes on the bottom of the shelf.

There are at least a couple ways to secure the Lrhooks into the wall. You can either screw them directly into the studs. Or, if you're going into drywall, you can use drywall anchors, see the box at right. ❑

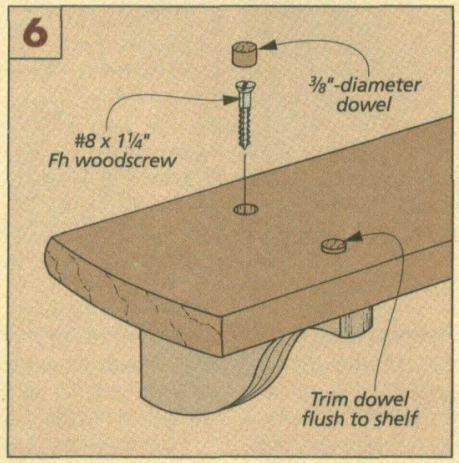

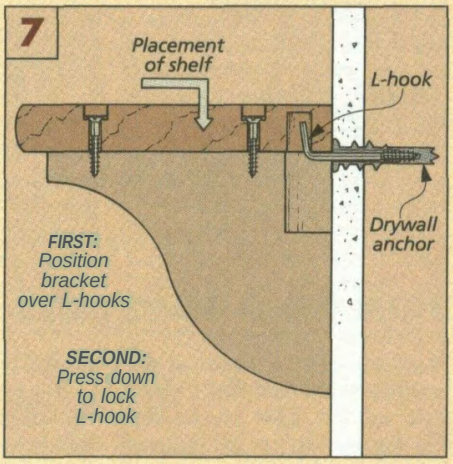

SELF-DRILLING DRYWALL ANCHORS

The Lrhooks used to hang these shelves can be screwed into a wall stud. But this will really limit where you can position the shelves on the wall. Unfortunately, they don't provide enough holding power when screwed directly into drywall. So what do you do?

I found that a couple drywall anchors hold the L-hooks well. And the nice thing is their tips are shaped like spade bits, so you don't need to drill a pilot hole, see photo.

Drywall anchors are made from metal or plastic and are available at hardware stores. (Or you can order them from the mail order source in the box on page 31.) Note: These anchors won't work in plaster (or a stud).

Shop Notes

DOVETAIL JIG

• The timing couldn't have been better for receiving a dovetail jig design from **Jeffrey Kern** of Benicia, California. We were just getting started on the dovetail chest. And his jig helps keep the saw aligned with the lay-out lines when making the cuts. (Refer to page 24 for more on laying out dovetails.)

The jig consists of two pieces. There's a block to guide the saw, and a clamping bar to hold the jig in place.

Once you've decided on the dovetail angle (I used 14° for the dovetail chest on page 18, and 9° for the drawer on page 11), it's easy to build the jig. Start with the guide block, see Fig. 1. Both the sides and kerfs use the same angle. The block is beveled on the sides for cutting the tails. And has two angled kerfs for cutting the pins.

Then glue and screw the guide block to the clamping bar, see Fig. 2. But don't cut off the waste just yet. It keeps all the pieces of the guide block positioned correctly on the clamping bar until the glue dries.

To use the jig, clamp it to the end of the workpiece and start on the pins, see Fig. 3. For more on cutting dovetails, refer to page 24. The only thing critical here is to make sure the saw blade stays tight against the guide block on the jig.

You cut the tails the same way. Except this time, you'll use the bevel on the side of the block to guide the saw, see Fig. 4.

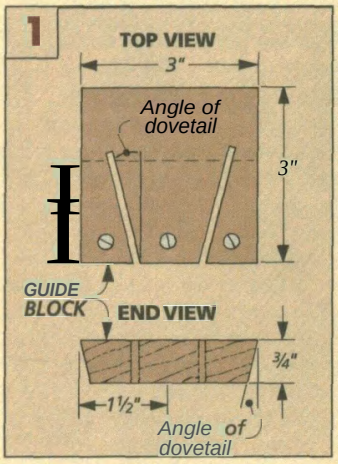

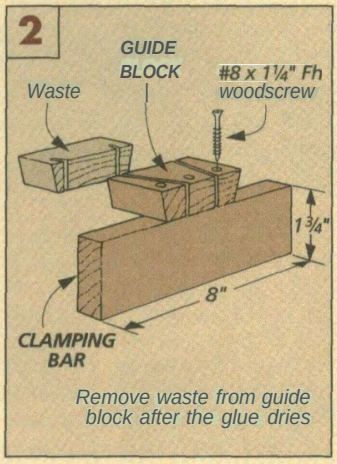

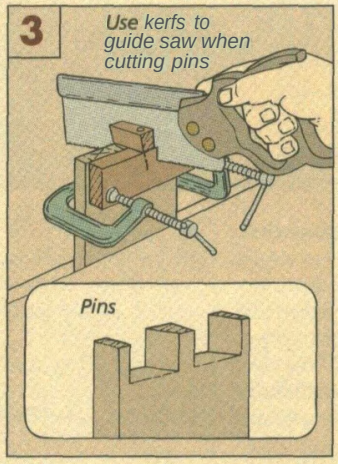

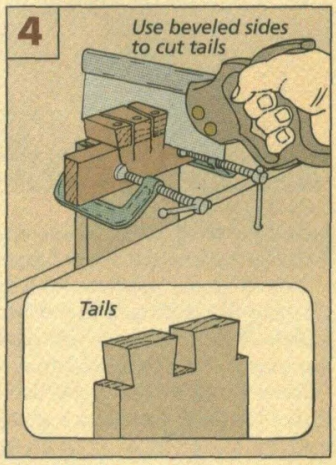

TRIMMING DOVETAILS

• On page 21 we show a tip for trimming dovetails flush with a belt sander. This works fine when there isn't much material to remove. But if the pins and tails are cut a little long, there's a quicker way to do the same thing. All you need is a straight bit and your router, see Fig. 1.

But first you have to replace the existing router base with a different one. That's because the edge of a regular base runs into the pins or tails before the bit can get near enough to trim them flush. To solve this problem, I made an auxiliary base to raise the router up so it doesn't hit the dovetails.

This auxiliary base is simply a ¾"-thick piece of stock with a wide rabbet cut on the bottom, see Fig. 2. The rabbet provides the clearance needed so the bit can reach the pins and tails. To make the base stable, it's cut extra long (mine was 11"). And for added control, there's a block at one end for a handle.

To use the jig, adjust the bit height so it trims the pins or tails flush, see Fig. 3.

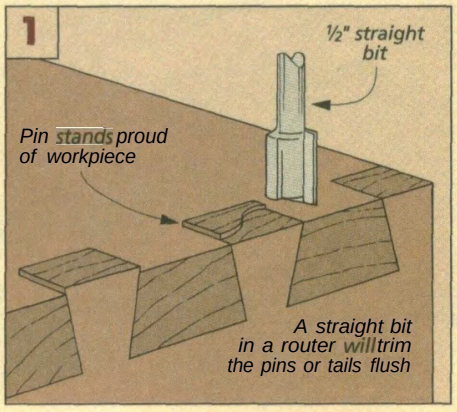

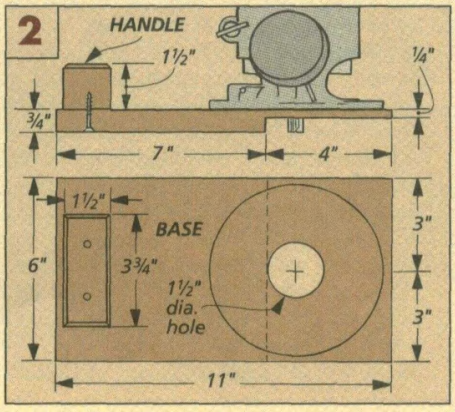

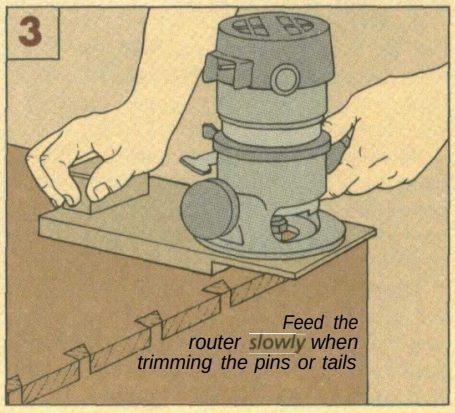

Sources

Woodsmith Project Supplies offers hardware kits and supplies for some of the projects shown in this issue. Supplies for these projects are also available at your local hardware store or through one of the mail order catalogs listed below.

CLASSIC WORKBENCH

A complete hardware kit for the workbench, shown on page 6, is available from *Woodsmith Project Supplies*. This kit includes all the hardware you'll need to build the bench (listed in the Supplies box on page 7), *except* for the vise and the hardware needed to mount the vise.

W100-7100-100 Workbench Hardware Kit $55.95

Note: Similar hardware is available from several woodworking catalogs listed in the mail order sources below.

VISE. We also added a metal woodworking vise, the Record 52½ ED, to our workbench, refer to the photo on page 3. This vise is available from the mail order sources listed below.

Besides the vise, you'll also need some mounting hardware. Mounting the 52½ ED requires:

- (2) #14 x 2" Rh Woodscrews
- (4) ½" x 3½" Lag Screws
- (4) ½" Flat Washers

ACCESSORIES. One way to improve the versatility of a workbench is to add holdfasts and bench dogs. *Woodsmith Project Supplies* is currently offering a holdfast and two types of bench dogs. (These are also available from the sources listed below.) Each of these accessories fits into the ¾"-dia. holes drilled in the top of your bench top.

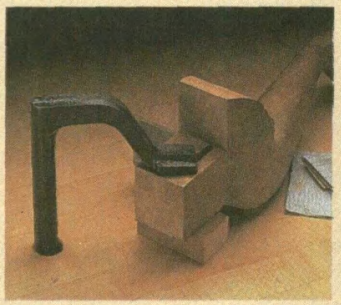

Holdfast. *This simple holdfast is a traditional clamp that can be used to secure a workpiece to the top of your workbench.*

HOLDFAST. The first accessory you might want to consider is actually an old one: a holdfast, see left photo above. It's one of the simplest ways to secure a workpiece to a bench. (Ours will secure stock up to 4" thick.) Simply drive the head down to jamb the holdfast into the hole, and it won't let up until you dislodge it with a sideways tap.

W100-1301-600 Holdfast.....$9.95

TRADITIONAL DOG. Another traditional bench accessory is a bench dog. It's used with a woodworking vise. Normally, bench dogs are square, but the ones we're offering are round, see right photo below. They're made from solid brass, so they're less likely to nick your plane blades or chisels.

W100-1301-618 Bench Dogs (One pair).....$19.95

WONDER DOG. Another type of bench dog is the Wonder Dog, see right photo. You don't need to use a vise with this dog. The body is round, but it also has a 6"-long steel thread attached to a brass head, so you can apply pressure just like a vise or a clamp.

W100-1301-616 Wonder Dog.....$24.95

Bench Dogs. *These bench dogs (right) and Wonder Dog (left) are modern tools for making your workbench more useful.*

DOVETAIL CHEST

The dovetail chest on page 18 doesn't require much hardware. For hinges, I chose some easy-to-install 3" no-mortise hinges, see sources below.

But you'll need something to prevent the lid from opening too far. For this, I used a brass chain and two screws. If children are going to be opening and closing the lid, I recommend using a lid support that won't slam shut. Check the sources below.

SHELLAC

To finish the chest, I used shellac, see the box on page 22.

These days, shellac is used mostly as a "stain blocker" that you can buy ready-to-use at many hardware and paint stores. Unfortunately, many manufacturers don't date the cans, so you don't know how long it's been on the shelf. And shellac that's been dissolved in alcohol only has a shelf life of about a year.

Instead, I buy shellac flakes and dissolve them with denatured alcohol in a glass jar. (For sources of shellac flakes, see the list below.) Note: Behlens manufactures a product specifically for dissolving shellac called Behkol, see below.

If you decide to buy shellac in flakes, there are a number of different grades to choose from: button lac, garnet, orange, and blonde. Each is just another step in the purification process. Button lac is the darkest in color, while the blonde is fairly clear.

HOW TO ORDER

To order a project kit from *Woodsmith Project Supplies*, use our Toll Free order line. It's open Monday through Friday, from 7 AM to 7 PM Central Time.

Before calling, please have your VISA, MasterCard, or Discover Card ready.

If you would like to mail your order in, call the number below for more information on shipping charges and any applicable sales tax.

1-800-444-7527

Note: Prices subject to change after October, 1995

MAIL ORDER SOURCES

Similar hardware and supplies may be found in the following catalogs. Please call each company for a catalog or information.

Constantine's
800–223–8087
Record vise, Vise accessories, No-mortise hinges, Lid supports, Shellac flakes, Behkol

Garrett Wade
800–221–2942
Record vise, Vise accessories, Shellac flakes, Behkol

Woodworker's Supply
800–645–9292
Vise accessories, Shellac flakes, Behkol, Drywall anchors

Woodcraft
800–225–1153
Workbench hardware, Record vise, Vise accessories, No-mortise hinges, Lid supports

Woodworker's Hardware
800–383–0130
Workbench hardware, No-mortise hinges, Lid supports

The Woodworkers' Store
800–279–4441
Workbench hardware, Vise accessories, No-mortise hinges, Lid Supports

WoodNet
COMPUTER BULLETIN BOARD FOR WOODWORKERS

- Project Plans to Download
- Woodworking Forums
- Finishing Forum
- Back Issue Indexes for *Woodsmith* & *ShopNotes*
- For PC and Mac
- FREE First Month

To log on to WoodNet, set your communication program to 8 data bits, 1 stop bit, no parity, full duplex, and ANSI terminal emulation. Then call 1-515-245-9663.

If you have any questions, give us a call: 515-282-7000 M-F 9-5 CST

A LAST LOOK

Final Details

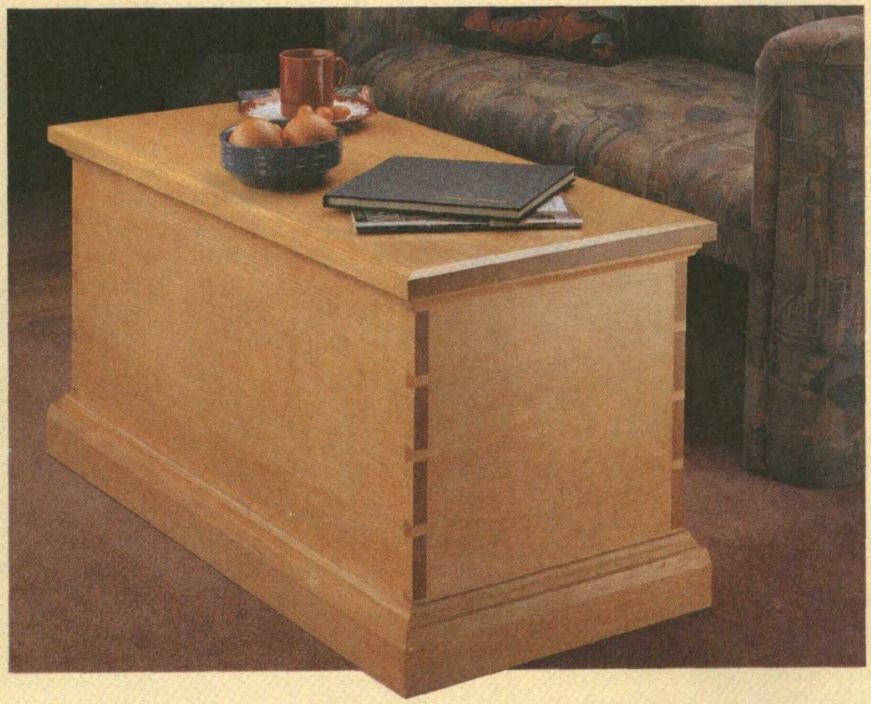

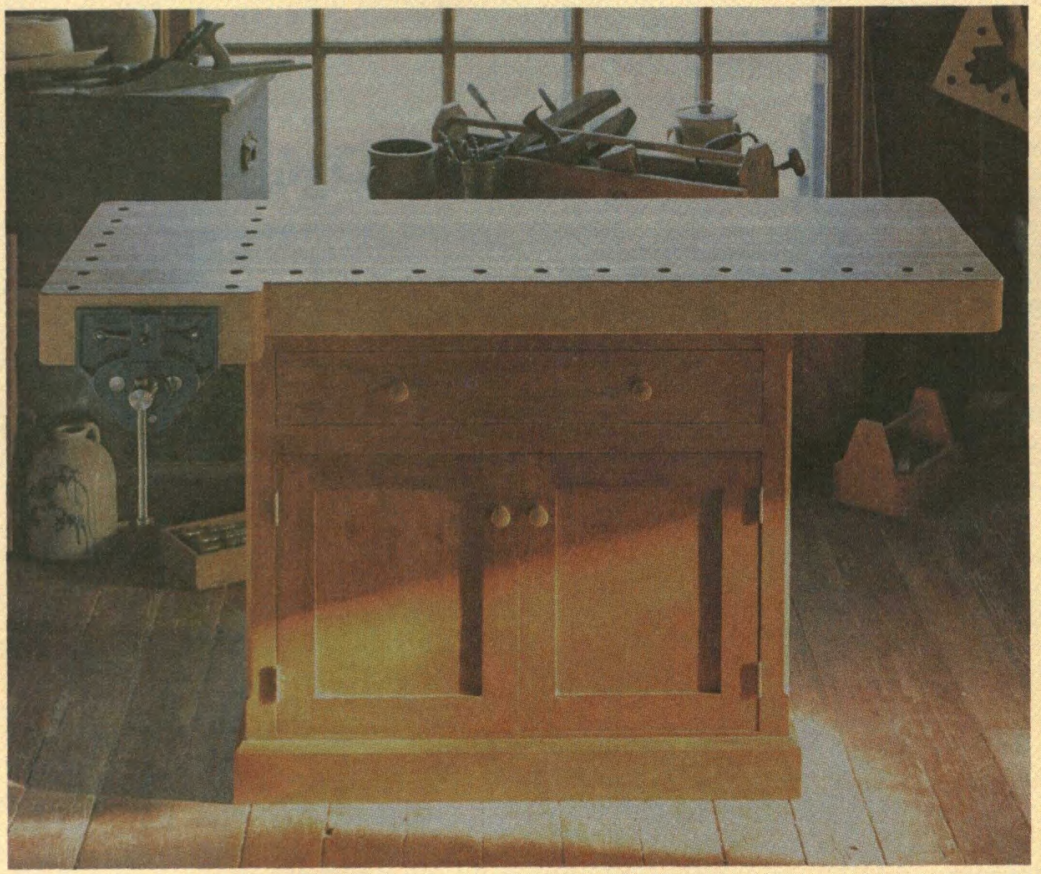

Hand-Cut Dovetails ***Page 24***
Cutting dovetails by hand isn't just for the experts. You can create a tight-fitting joint with our step-by-step instructions.

Dovetail Chest ***Page 18***
With its clean lines and hand-cut dovetails, this pine chest will fit almost any room in your home.

Classic Workbench ***Page 6***
Not only does this bench feature a solid, laminated top, it also has an enclosed base to store a variety of tools and accessories.